www.barnhartcrane.com

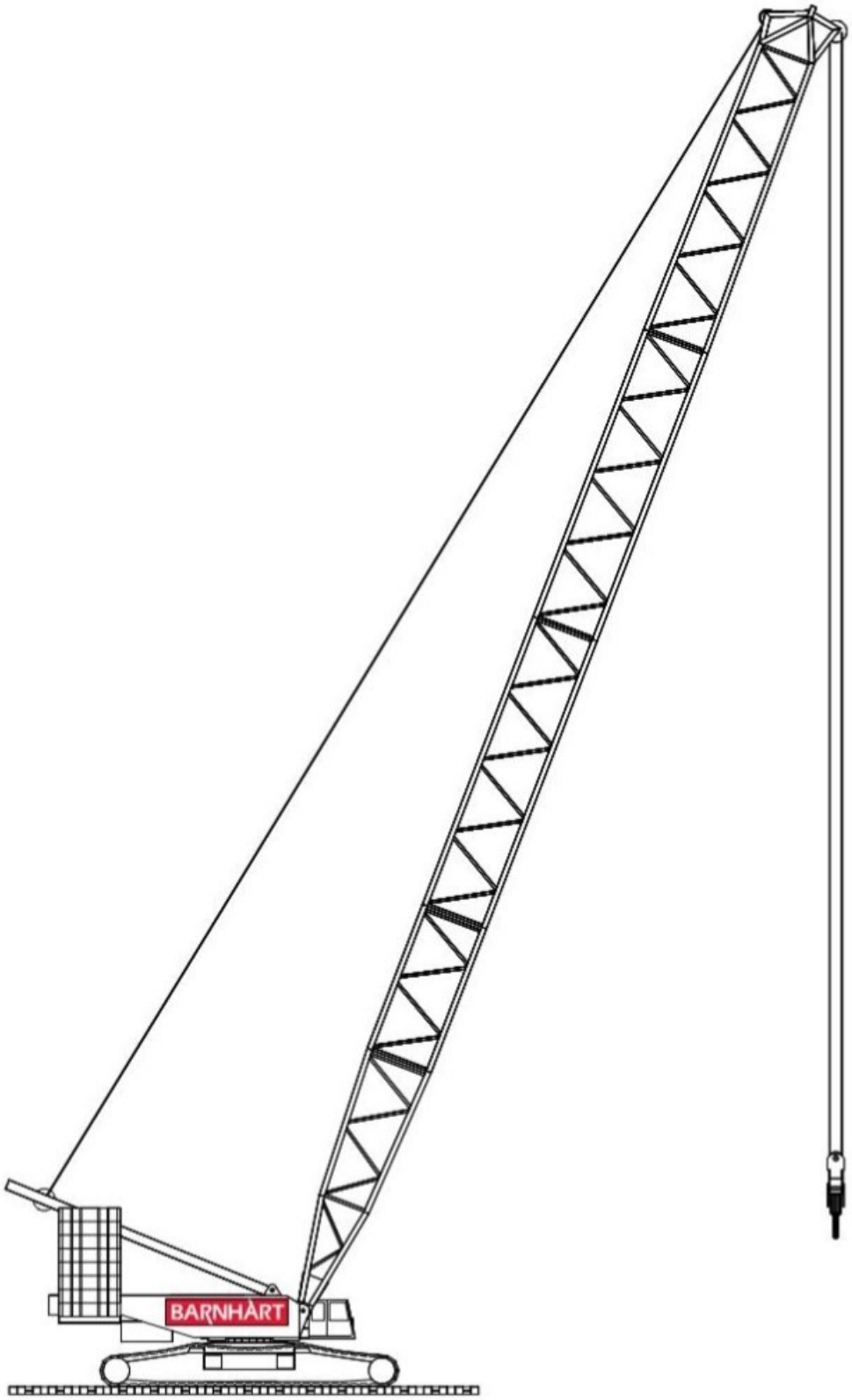

Demag CC2800

600T

Key

Track

Counterweight

Superlift counterweight

Counterweight carrier

„D“

S: Heavy

L: Light

H: Main boom

W: Luffing fly jib

F: Fixed fly jib

SL: Superlift

SGL: Heavy base length

Contents

Specifications

Specifications 4
Boom combinations 8
Specifications 10

Main boom

Working ranges (SH, SH/LH) 11
Lifting capacities (SH, SH/LH) 12
Lifting capacities with Superlift (SSL, SSL/LSL) 14
Working ranges with Superlift (SSL, SSL/LSL) 20

Fixed fly jib

Working ranges, 10° (LF, SH/LH + LF) 21
Lifting capacities (LF, SH/LH + LF) 22
Working ranges, 30° (LF, SH/LH + LF) 24
Working ranges with SL, 10° (SSL + LF, SSL/LSL + LF) 25
Lifting capacities with SL, (SSL + LF, SSL/LSL + LF) 26
Working ranges with SL, 30° (SSL + LF, SSL/LSL + LF) 32

Luffing fly jib

Working ranges, main boom 85° (SW) 33
Lifting capacities, main boom 85° (SW) 34
Working ranges with SL, main boom 85° (SWSL) 37
Lifting capacities with SL, main boom 85° (SWSL) 38

Fixed fly jib

Working ranges with SL, 15° (SFSL) 43
Lifting capacities with SL, 15° (SFSL) 44
Working ranges with SL, 13° (SFVL) 49
Lifting capacities with SL (SFVL) 50
Working ranges with SL, 20° (SFVL) 52

Technical description

Crawler carrier · Superstructure · Optional equipment 54
Boom configurations S and L 55

Specifications

Working speeds (infinitely variable)

Mechanisms	Speeds[1)]	Single line pull	Length of hoist rope
Hoist 1	max. 393.7 ft	36,420 lb / 32,500 lb[2)]	2952.8 ft
Hoist 2	max. 393.7 ft	36,420 lb / 32,500 lb[2)]	2952.8 ft
Boom derricking	max. 393.7 ft		
Boom hoist	max. 171.0 ft		
Fly jib luffing	max. 393.7 ft		
Slewing (RPM)	0.7		

1) Top layer
2) Without/with reeving effect considered

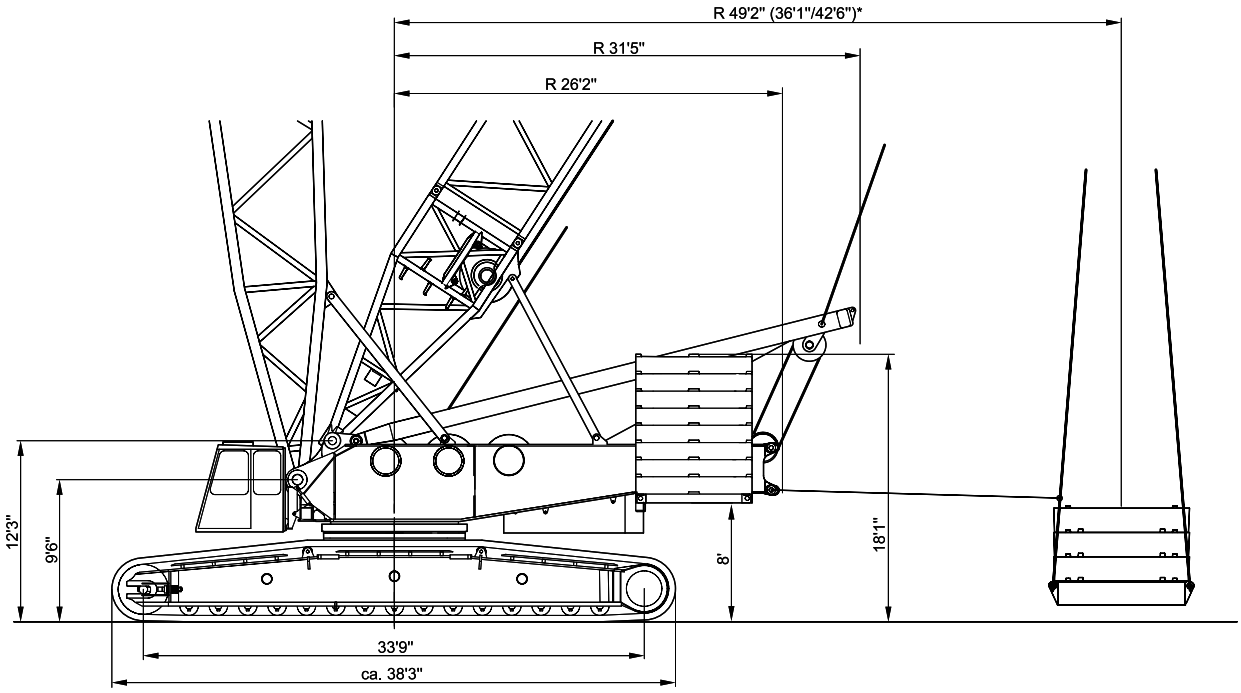

*optional

Specifications

Hook blocks

Capacity	Number of sheaves	Number of lines	Weight	„D“
1.322,770 lb [1)]	2 x 11	2 x 22	25,400 lb	16.4 ft
881,850 lb [1)]	2 x 7	2 x 14	22,100 lb	15.7 ft
220,460 lb	3	7	11,100 lb	14.9 ft
110,230 lb	1	3	6,200 lb	13.1 ft
35,300 lb	–	1	1,980 lb	9.8 ft

[1)] The double hook blocks can be converted into single hook blocks.

Carrier performance

1st gear	0-0.9 mph
2nd gear	0-1.8 mph

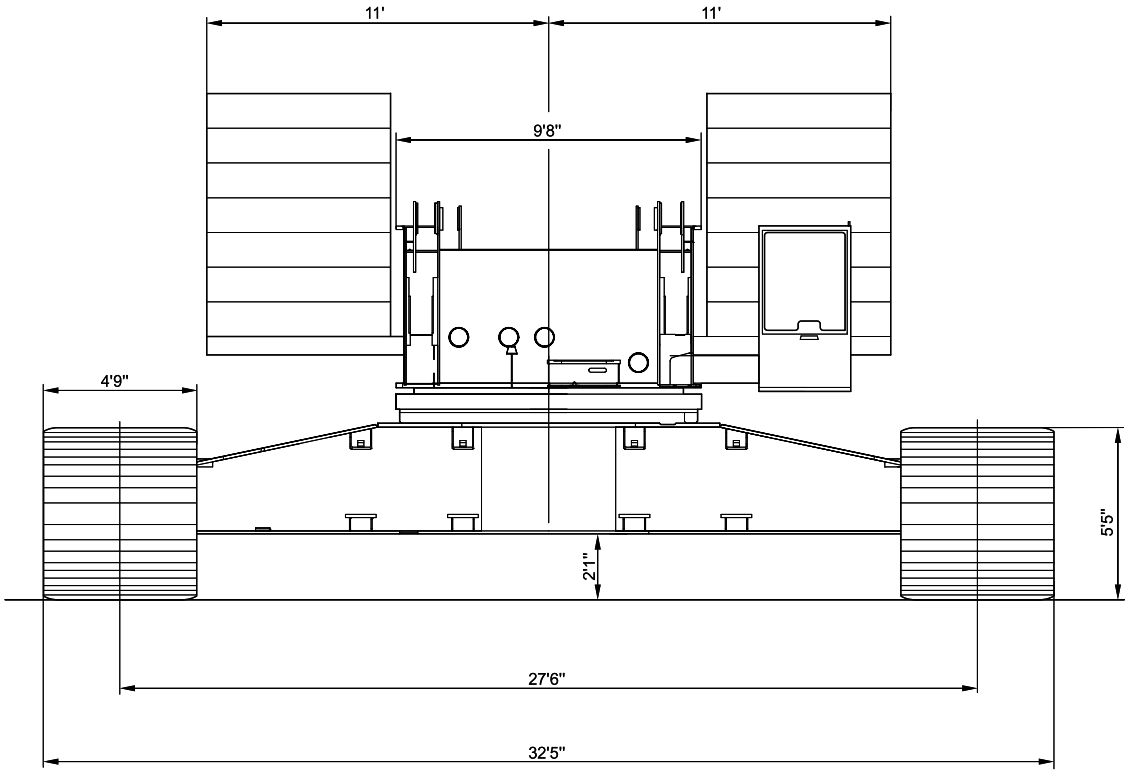

Specifications

Weights

Total weight incl. counterweight 353,000 lb, 78.7 ft SH boom and hook block	794,000 lb
Superstructure (with three drums, A-frame, reeving drum and boom backstops)	121,300 lb
Superstructure (without drums H1/H3, reeving winch and boom backstops) incl. part of quick-connection	88,200 lb
Carbody / Carbody with assembly jacks	55,200 / 60,000 lb
Crawlers	2 x 86,000 lb
Counterweight	353,000 lb

Ground pressure

Ground pressure, based on 794,000 lb total weight	14 N/cm^2

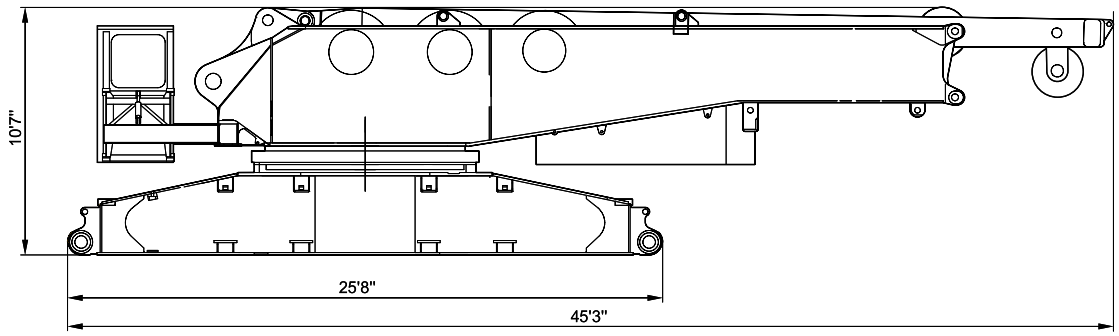

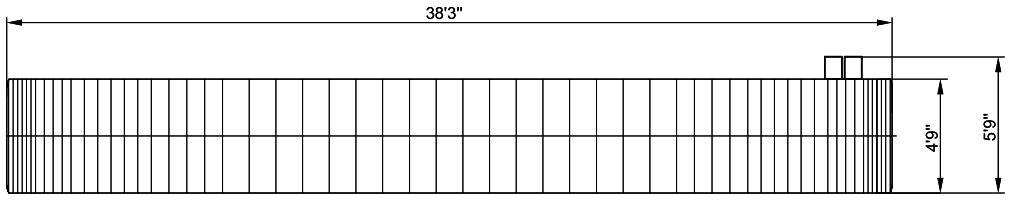

Specifications

Counterweights on upper

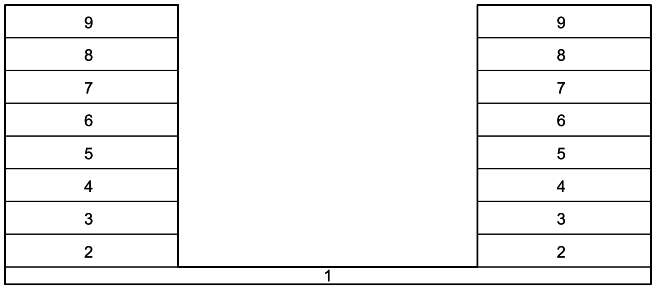

Central ballast (ZB)

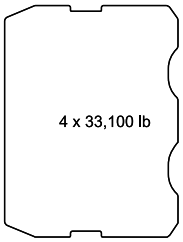

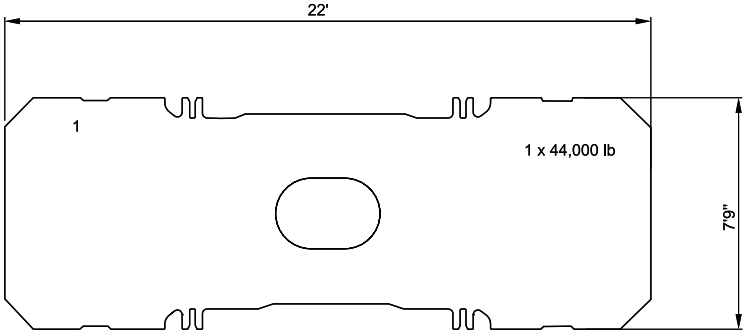

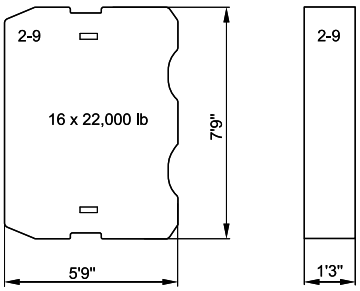

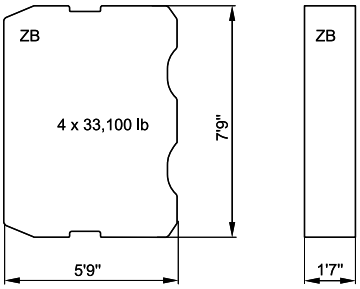

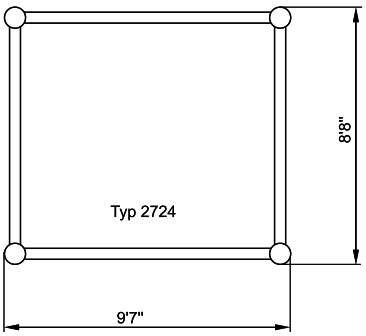

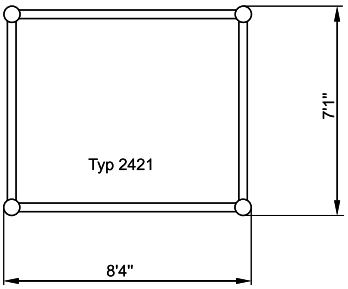

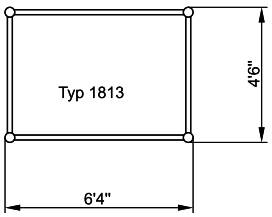

Boom combinations

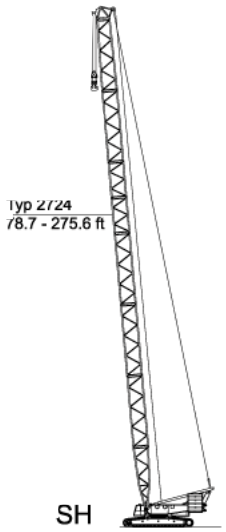

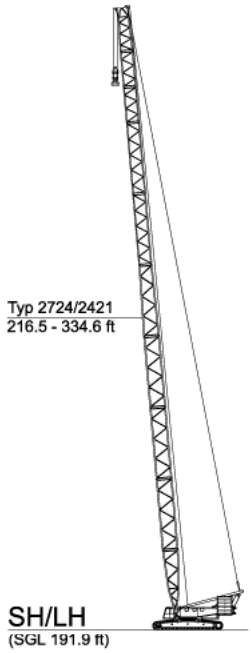

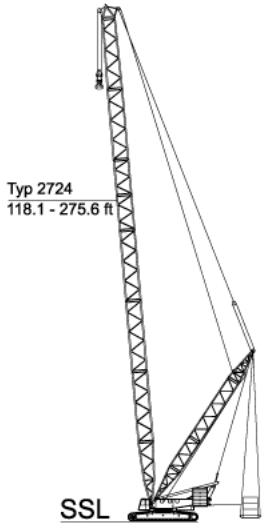

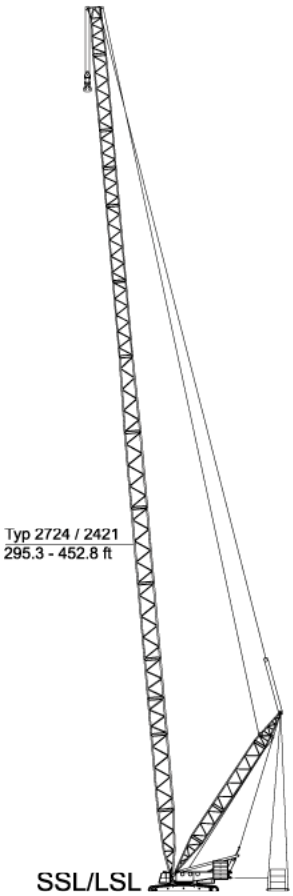

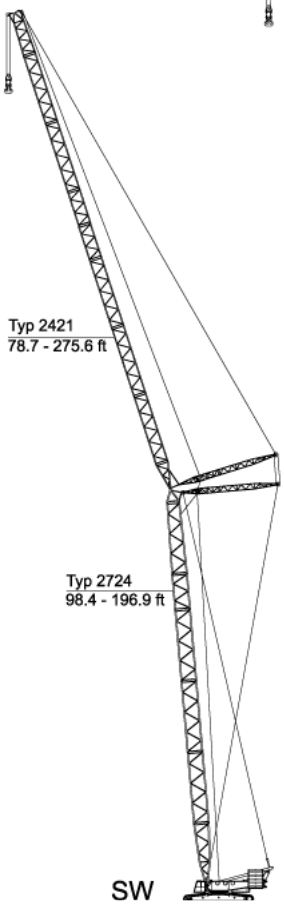

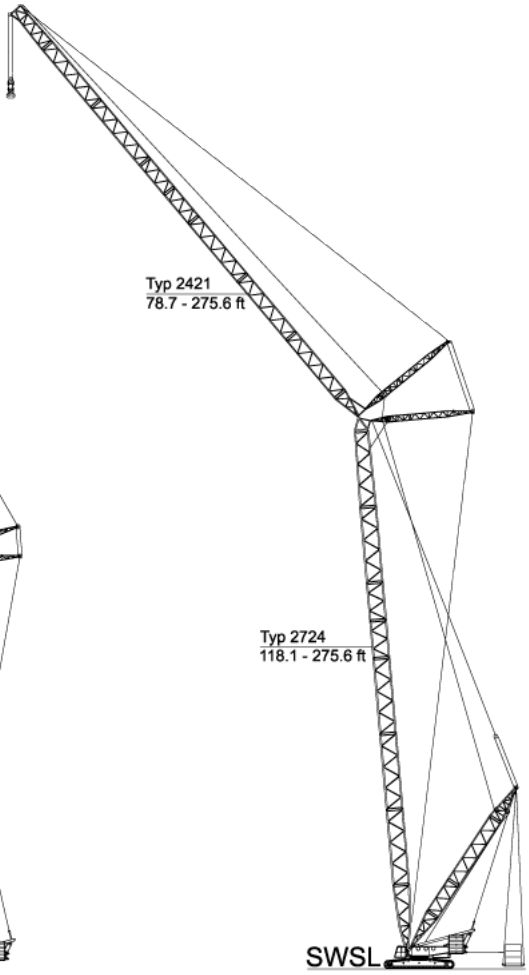

Boom combinations

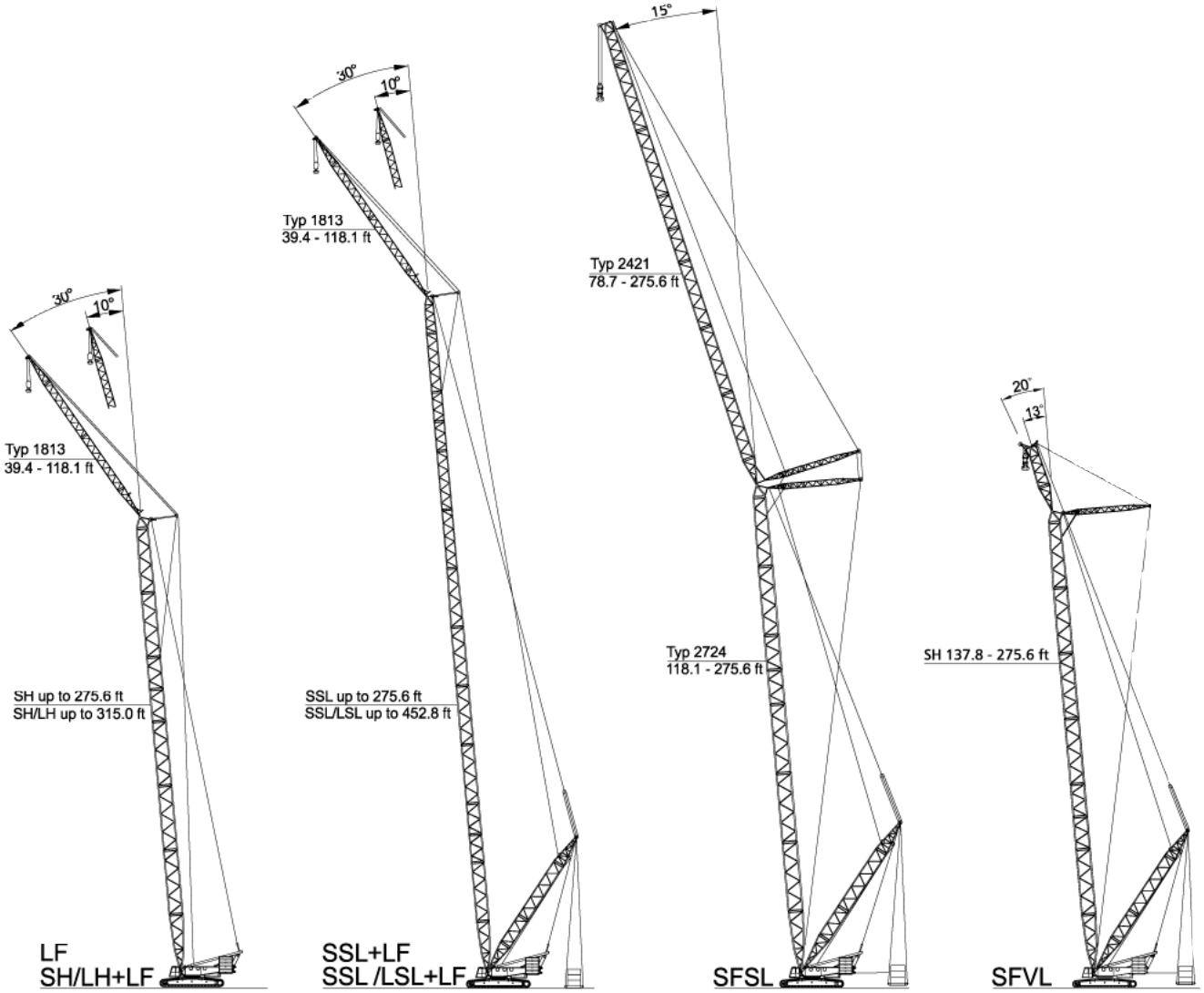

Specifications

Erection / lowering of the CC 2800 boom systems to the ground

Version	Main boom ft	Fly jib ft	Counterweight lb	Central ballast lb	Remarks
SH	78.7 – 236.2 255.9 – 275.6 **	–	397,000	132,000	
SH/LH	216.5 – 275.6 295.3 – 334.6 **	–	397,000	132,000	
SW	98.4 – 157.5 177.2 – 196.9	78.7 – 275.6 78.7 – 275.6 **	397,000 397,000	132,000 132,000	Without add. sheave assembly on boom head
LF 10°, 30°	98.4 – 236.2 275.6	39.4 – 118.1 39.4 – 118.1 **	397,000 397,000	132,000 132,000	Without add. sheave assembly on boom head
LF on SH/LH 10°, 30°	98.4 – 275.6 295.3 – 334.6	39.4 – 118.1 39.4 – 118.1 **	397,000 397,000	132,000 132,000	Without add. sheave assembly on boom head
SSL	118.1 – 275.6	–	–	–	with SL-counterweight
SSL/LSL	295.3 – 452.8	–	–	–	with SL-counterweight
SWSL/SFSL/ SFVL	118.1 – 275.6	78.7 – 275.6	–	–	with SL-counterweight

Remarks

All versions without runner! Further details on request! Erection over idler wheel for all versions!

** Only with assist crane or auxiliary equipment

Working ranges main boom

SH, SH/LH

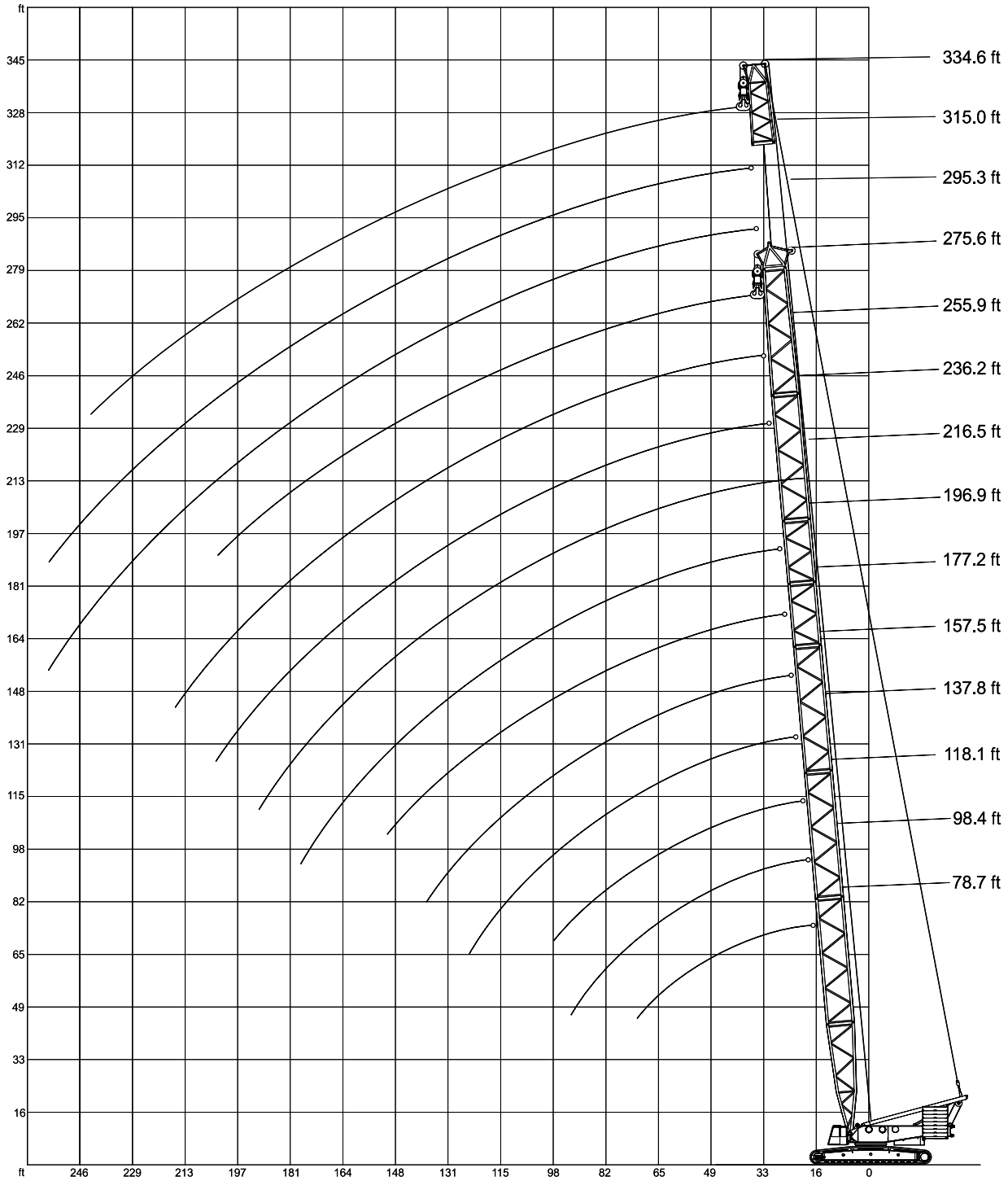

Lifting capacities main boom

397,000 lb[1)] 27.6 ft 360° DIN/ISO

		Main boom										
Radius		78.7 ft	98.4 ft	118.1 ft	137.8 ft	157.5 ft	177.2 ft	196.9 ft	216.5 ft	236.2 ft	255.9 ft	275.6 ft
	ft	1,000 lb										
	19	1322.8	–	–	–	–	–	–	–	–	–	–
	23	1263.2	1256.6	1250.0	–	–	–	–	–	–	–	–
	26	1115.5	1108.9	1100.1	1095.7	1089.1	–	–	–	–	–	–
	29	892.9	890.7	886.3	884.1	881.8	881.8	879.6	–	–	–	–
	33	734.1	729.7	727.5	723.1	720.9	720.9	718.7	716.5	663.6	–	–
	39	537.9	533.5	529.1	526.9	522.5	522.5	520.3	518.1	518.1	515.9	467.4
	46	421.1	416.7	412.3	410.1	405.7	405.7	403.4	401.2	399.0	399.0	394.6
	52	343.9	339.5	337.3	332.9	328.5	328.5	324.1	324.1	321.9	319.7	317.5
	59	291.0	286.6	282.2	277.8	275.6	273.4	269.0	269.0	266.8	264.6	262.4
	65	249.1	244.7	240.3	238.1	233.7	231.5	229.3	227.1	224.9	222.7	220.5
	72	218.3	213.8	209.4	205.0	202.8	200.6	196.2	196.2	194.0	191.8	187.4
SH	79	–	189.6	185.2	180.8	176.4	174.2	172.0	169.8	167.6	165.3	163.1
	85	–	169.8	165.3	160.9	156.5	154.3	152.1	149.9	147.7	145.5	141.1
	92	–	154.3	147.7	143.3	138.9	136.7	134.5	132.3	130.1	127.9	123.5
	98	–	–	134.5	130.1	125.7	123.5	119.0	116.8	114.6	114.6	110.2
	111	–	–	–	108.0	103.6	99.2	97.0	94.8	92.6	90.4	86.0
	124	–	–	–	90.4	86.0	83.8	79.4	77.2	72.8	70.5	66.1
	138	–	–	–	–	72.8	70.5	66.1	61.7	59.5	57.3	52.9
	151	–	–	–	–	–	59.5	52.9	50.7	48.5	44.1	39.7
	164	–	–	–	–	–	–	44.1	41.9	37.5	35.3	30.9
	177	–	–	–	–	–	–	37.5	35.3	30.9	28.7	22.0
	190	–	–	–	–	–	–	–	28.7	24.3	22.0	15.4
	203	–	–	–	–	–	–	–	–	19.8	15.4	11.0
	216	–	–	–	–	–	–	–	–	–	11.0	–

353,000 lb 27.6 ft 360° DIN/ISO

		Main boom										
Radius		78.7 ft	98.4 ft	118.1 ft	137.8 ft	157.5 ft	177.2 ft	196.9 ft	216.5 ft	236.2 ft	255.9 ft	275.6 ft
	ft	1,000 lb										
	19	1322.8	–	–	–	–	–	–	–	–	–	–
	23	1239.0	1232.4	1225.8	–	–	–	–	–	–	–	–
	26	1049.4	1047.2	1042.8	1040.6	1038.4	–	–	–	–	–	–
	29	822.3	820.1	817.9	813.5	811.3	811.3	809.1	–	–	–	–
	33	674.6	672.4	670.2	665.8	663.6	661.4	661.4	659.2	657.0	–	–
	39	493.8	491.6	487.2	482.8	480.6	478.4	476.2	476.2	474.0	474.0	467.4
	46	385.8	383.6	379.2	374.8	372.6	370.4	368.2	366.0	366.0	363.8	361.6
	52	315.3	313.1	308.6	304.2	302.0	299.8	297.6	295.4	293.2	291.0	288.8
	59	266.8	262.4	257.9	253.5	251.3	249.1	246.9	244.7	242.5	240.3	238.1
	65	229.3	224.9	220.5	216.1	211.6	209.4	207.2	205.0	205.0	202.8	198.4
SH	72	200.6	196.2	191.8	187.4	183.0	180.8	178.6	176.4	174.2	172.0	169.8
	79	–	172.0	167.6	163.1	160.9	158.7	154.3	152.1	152.1	149.9	145.5
	85	–	154.3	149.9	145.5	141.1	138.9	136.7	134.5	132.3	130.1	125.7
	92	–	138.9	134.5	130.1	125.7	123.5	119.0	119.0	116.8	114.6	110.2
	98	–	–	121.3	116.8	112.4	110.2	105.8	105.8	101.4	101.4	97.0
	111	–	–	–	97.0	92.6	88.2	86.0	83.8	79.4	77.2	72.8
	124	–	–	–	81.6	77.2	72.8	68.3	66.1	63.9	61.7	57.3
	138	–	–	–	–	63.9	59.5	55.1	52.9	50.7	46.3	41.9
	151	–	–	–	–	–	50.7	46.3	41.9	39.7	37.5	30.9
	164	–	–	–	–	–	–	37.5	33.1	30.9	28.7	22.0
	177	–	–	–	–	–	–	30.9	26.5	24.3	19.8	15.4
	190	–	–	–	–	–	–	–	22.0	17.6	15.4	–
	203	–	–	–	–	–	–	–	–	13.2	–	–

Remarks [1)] with 132,000 lb central ballast

Lifting capacities main boom

397,000 lb[1)] 27.6 ft 360° DIN/ISO

	Radius	Main boom 216.5 ft	236.2 ft	255.9 ft	275.6 ft	295.3 ft	315.0 ft	334.6 ft
	ft	1,000 lb						
	29	657.0	–	–	–	–	–	–
	33	657.0	549.0	445.3	–	–	–	–
	39	533.5	533.5	445.3	372.6	339.5	302.0	–
	46	414.5	414.5	383.6	330.7	339.5	302.0	238.1
	52	337.3	337.3	337.3	293.2	313.1	280.0	218.3
	59	282.2	282.2	282.2	262.4	277.8	260.1	200.6
	65	240.3	240.3	240.3	235.9	238.1	235.9	185.2
	72	209.4	209.4	207.2	205.0	205.0	202.8	172.0
	79	183.0	183.0	183.0	180.8	178.6	178.6	158.7
	85	163.1	163.1	160.9	158.7	158.7	156.5	149.9
	92	145.5	145.5	143.3	143.3	141.1	138.9	138.9
SH/LH	98	130.1	130.1	130.1	127.9	125.7	125.7	123.5
	111	108.0	108.0	105.8	103.6	103.6	101.4	101.4
	124	90.4	90.4	88.2	86.0	86.0	83.8	83.8
	138	77.2	75.0	75.0	72.8	70.5	68.3	68.3
	151	66.1	63.9	63.9	59.5	59.5	57.3	55.1
	164	55.1	55.1	52.9	50.7	48.5	46.3	46.3
	177	48.5	46.3	44.1	41.9	39.7	39.7	37.5
	190	41.9	39.7	37.5	35.3	33.1	30.9	30.9
	203	–	35.3	33.1	28.7	28.7	26.5	24.3
	216	–	–	28.7	24.3	22.0	19.8	19.8
	230	–	–	24.3	19.8	17.6	15.4	15.4
	243	–	–	–	17.6	15.4	13.2	11.0
	256	–	–	–	–	11.0	8.8	–

353,000 lb 27.6 ft 360° DIN/ISO

	Radius	Main boom 216.5 ft	236.2 ft	255.9 ft	275.6 ft	295.3 ft	315.0 ft	334.6 ft
	ft	1,000 lb						
	29	657.0	–	–	–	–	–	–
	33	657.0	549.0	445.3	–	–	–	–
	39	489.4	489.4	445.3	372.6	339.5	302.0	–
	46	381.4	381.4	381.4	330.7	339.5	302.0	238.1
	52	308.6	308.6	308.6	293.2	306.4	280.0	218.3
	59	257.6	257.9	257.9	255.7	253.5	253.5	200.6
	65	220.5	220.5	218.3	216.1	216.1	213.8	185.2
	72	189.6	189.6	189.6	187.4	187.4	185.2	172.0
	79	167.6	167.6	165.3	163.1	163.1	160.9	158.7
	85	147.7	147.7	145.5	143.3	143.3	141.1	141.1
SH/LH	92	132.3	132.3	130.1	127.9	127.9	125.7	125.7
	98	119.0	116.8	116.8	114.6	114.6	112.4	110.2
	111	97.0	97.0	94.8	92.6	92.6	90.4	90.4
	124	79.4	79.4	79.4	77.2	75.0	72.8	72.8
	138	68.3	66.1	66.1	63.9	61.7	59.5	57.3
	151	57.3	55.1	55.1	52.9	50.7	48.5	46.3
	164	48.5	46.3	46.3	41.9	41.9	39.7	37.5
	177	39.7	39.7	37.5	35.3	33.1	30.9	30.9
	190	35.3	33.1	30.9	28.7	26.5	24.3	24.3
	203	–	28.7	26.5	24.3	22.0	19.8	17.6
	216	–	–	22.0	19.8	17.6	15.4	13.2
	230	–	–	17.6	15.4	13.2	11.0	8.8
	243	–	–	–	11.0	8.8	–	–

Remarks [1)] with 132,000 lb central ballast

Lifting capacities main boom with Superlift

Main boom: 118.1 ft — SL-Radius 49.2 ft

397,000 lb[1)] — 27.6 ft — 360°

	Radius lb	0	110.2	220.5	330.7	440.9	551.2	661.4	716.5
	ft				1,000 lb				
SSL	23	1269.9	1322.8	1322.8	–	–	–	–	1322.8
	26	1106.7	1258.8	1278.7	1291.9	–	–	–	1322.8
	29	934.8	1124.4	1239.0	1263.2	1291.9	–	–	1322.8
	33	776.0	994.3	1128.8	1232.4	1269.9	–	–	1311.8
	39	566.6	765.0	925.9	1040.6	1137.6	1208.1	–	1208.1
	46	443.1	599.7	758.4	881.8	976.6	1058.2	1091.3	1091.3
	52	361.6	491.6	621.7	747.4	848.8	925.9	972.2	972.2
	59	302.0	414.5	526.9	639.3	736.3	822.3	857.6	857.6
	65	260.1	357.1	454.2	553.4	648.2	727.5	749.6	749.6
	72	227.1	313.1	399.0	487.2	573.2	650.4	661.4	661.4
	79	200.6	277.8	354.9	434.3	511.5	588.6	590.8	590.8
	85	178.6	249.1	319.7	390.2	460.8	533.5	537.9	537.9
	92	160.9	224.9	291.0	354.9	421.1	485.0	489.4	489.4
	98	145.5	205.0	264.6	326.3	385.8	432.1	432.1	432.1

Main boom: 137.8 ft — SL-Radius 49.2 ft

	Radius lb	0	110.2	220.5	330.7	440.9	551.2	661.4	716.5
	ft				1,000 lb				
SSL	26	1104.5	1254.4	1272.1	1278.7	–	–	–	1289.7
	29	932.6	1119.9	1223.6	1243.4	1265.5	–	–	1289.7
	33	771.6	992.1	1124.4	1212.5	1250.0	–	–	1289.7
	39	562.2	760.6	923.7	1036.2	1131.0	1203.7	–	1203.7
	46	438.7	595.2	754.0	877.4	970.0	1053.8	1053.8	1053.8
	52	357.1	487.2	619.5	745.2	846.6	921.5	928.1	928.1
	59	299.8	410.1	522.5	634.9	734.1	817.9	826.7	826.7
	65	255.7	352.7	451.9	549.0	646.0	725.3	743.0	743.0
	72	222.7	308.6	396.8	482.8	568.8	646.0	674.6	674.6
	79	196.2	273.4	352.7	429.9	507.1	584.2	617.3	617.3
	85	174.2	244.7	315.3	385.8	456.4	529.1	566.6	566.6
	92	156.5	220.5	286.6	350.5	416.7	480.6	520.3	520.3
	98	141.1	200.6	260.1	321.9	381.4	440.9	476.2	476.2
	111	116.8	169.8	220.5	273.4	324.1	377.0	394.6	394.6
	124	101.4	145.5	191.8	238.1	284.4	317.5	–	317.5

Main boom: 157.5 ft — SL-Radius 49.2 ft

	Radius lb	0	110.2	220.5	330.7	440.9	551.2	661.4	716.5
	ft				1,000 lb				
SSL	26	1104.5	1190.5	1199.3	1208.1	–	–	–	1230.2
	29	932.6	1113.3	1199.3	1208.1	–	–	–	1230.2
	33	769.4	994.3	1119.9	1177.3	1201.5	–	–	1230.2
	39	560.0	758.4	923.7	1029.6	1126.6	1223.6	–	1230.2
	46	436.5	593.0	751.8	877.4	965.6	1049.4	1073.7	1073.7
	52	354.9	485.0	615.1	743.0	844.4	917.1	937.0	937.0
	59	295.4	407.9	520.3	630.5	731.9	813.5	826.7	826.7
	65	253.5	350.5	447.5	546.7	643.8	723.1	738.5	738.5
	72	218.3	306.4	392.4	478.4	566.6	643.8	668.0	668.0
	79	191.8	271.2	348.3	425.5	504.9	582.0	610.7	610.7
	85	169.8	242.5	313.1	383.6	454.2	524.7	564.4	564.4
	92	152.1	218.3	282.2	346.1	412.3	476.2	524.7	524.7
	98	136.7	198.4	257.9	317.5	377.0	436.5	487.2	487.2
	111	114.6	165.3	218.3	269.0	321.9	372.6	418.9	418.9
	124	94.8	141.1	187.4	233.7	277.8	324.1	357.1	357.1
	138	81.6	123.5	163.1	205.0	244.7	286.6	295.4	295.4

Main boom: 177.2 ft — SL-Radius 49.2 ft

397,000 lb[1)] — 27.6 ft — 360°

	Radius lb	0	110.2	220.5	330.7	440.9	551.2	661.4	716.5
	ft				1,000 lb				
SSL	29	934.8	1111.1	1142.0	1142.0	–	–	–	1142.0
	33	769.4	996.5	1115.5	1133.2	1142.0	–	–	1142.0
	39	557.8	756.2	925.9	1027.4	1113.3	1142.0	–	1142.0
	46	434.3	590.8	749.6	877.4	963.4	1045.0	1095.7	1095.7
	52	352.7	482.8	612.9	743.0	840.0	912.7	965.6	965.6
	59	293.2	405.7	518.1	630.5	731.9	809.1	857.6	857.6
	65	251.3	348.3	445.3	544.5	641.5	720.9	767.2	767.2
	72	216.1	304.2	390.2	476.2	564.4	643.8	692.3	692.3
	79	189.6	269.0	346.1	423.3	502.7	579.8	628.3	628.3
	85	167.6	238.1	310.9	381.4	451.9	522.5	577.6	577.6
	92	149.9	216.1	280.0	343.9	410.1	474.0	533.5	533.5
	98	134.5	194.0	253.5	315.3	374.8	434.3	493.8	493.8
	111	110.2	163.1	213.8	266.8	317.5	370.4	421.1	425.5
	124	92.6	138.9	183.0	229.3	275.6	321.9	363.8	363.8
	138	79.4	119.0	160.9	200.6	242.5	282.2	313.1	313.1
	151	68.3	105.8	141.1	178.6	216.1	253.5	273.4	273.4

Main boom: 196.9 ft — SL-Radius 49.2 ft

	Radius lb	0	110.2	220.5	330.7	440.9	551.2	661.4	716.5
	ft				1,000 lb				
SSL	29	937.0	1007.5	1011.9	1018.5	–	–	–	1025.2
	33	767.2	996.5	1011.9	1018.5	–	–	–	1025.2
	39	555.6	754.0	925.9	974.4	1003.1	–	–	1025.2
	46	432.1	588.6	747.4	875.2	959.0	1025.2	–	1025.2
	52	350.5	480.6	610.7	743.0	835.6	908.3	932.6	932.6
	59	291.0	403.4	515.9	626.1	729.7	804.7	831.1	831.1
	65	246.9	346.1	443.1	540.1	639.3	720.9	745.2	745.2
	72	213.8	299.8	388.0	474.0	560.0	641.5	674.6	674.6
	79	187.4	264.6	343.9	421.1	498.2	577.6	612.9	612.9
	85	165.3	235.9	306.4	377.0	447.5	520.3	562.2	562.2
	92	147.7	211.6	277.8	341.7	405.7	471.8	518.1	518.1
	98	132.3	191.8	251.3	310.9	370.4	432.1	482.8	482.8
	111	108.0	158.7	211.6	262.4	315.3	366.0	418.9	425.5
	124	88.2	134.5	180.8	227.1	271.2	317.5	363.8	374.8
	138	75.0	116.8	156.5	198.4	238.1	280.0	319.7	330.7
	151	61.7	101.4	136.7	174.2	211.6	249.1	284.4	291.0
	164	52.9	88.2	121.3	156.5	189.6	222.7	251.3	251.3
	177	46.3	79.4	110.2	141.1	172.0	202.8	213.8	213.8

Main boom: 216.5 ft — SL-Radius 49.2 ft

	Radius lb	0	110.2	220.5	330.7	440.9	551.2	661.4	716.5
	ft				1,000 lb				
SSL	33	765.0	868.6	879.6	890.7	–	–	–	906.1
	39	555.6	754.0	840.0	864.2	888.5	–	–	906.1
	46	429.9	588.6	745.2	837.8	875.2	906.1	–	906.1
	52	348.3	478.4	610.7	740.8	833.3	890.7	890.7	890.7
	59	288.8	401.2	513.7	626.1	729.7	802.5	809.1	809.1
	65	246.9	343.9	440.9	540.1	637.1	718.7	736.3	736.3
	72	211.6	299.8	385.8	471.8	560.0	641.5	672.4	672.4
	79	185.2	262.4	341.7	418.9	498.2	575.4	617.3	617.3
	85	163.1	233.7	304.2	374.8	447.5	518.1	568.8	568.8
	92	145.5	209.4	275.6	339.5	405.7	469.6	524.7	524.7
	98	130.1	189.6	249.1	308.6	368.2	429.9	487.2	487.2
	111	105.8	156.5	209.4	260.1	313.1	363.8	416.7	425.5
	124	86.0	132.3	178.6	224.9	269.0	315.3	361.6	372.6
	138	72.8	112.4	154.3	196.2	235.9	277.8	317.5	328.5
	151	59.5	99.2	134.5	172.0	209.4	246.9	282.2	293.2
	164	50.7	86.0	119.0	152.1	187.4	220.5	253.5	262.4
	177	41.9	75.0	105.8	136.7	167.6	200.6	229.3	229.3
	190	35.3	66.1	97.0	125.7	154.3	183.0	198.4	198.4

Lifting capacities main boom with Superlift

Main boom: 236.2 ft — SL-Radius 49.2 ft

397,000 lb[1)] — 27.6 ft — 360°

	Radius lb	0	110.2	220.5	330.7	440.9	551.2	661.4	716.5
	ft	1,000 lb							
SSL	33	749.6	762.8	773.8	–	–	–	–	822.3
	39	553.4	751.8	773.8	789.3	–	–	–	822.3
	46	429.9	586.4	743.0	767.2	793.7	–	–	822.3
	52	346.1	476.2	608.5	738.5	782.6	822.3	–	822.3
	59	288.8	399.0	511.5	623.9	731.9	773.8	773.8	773.8
	65	244.7	341.7	438.7	537.9	634.9	709.9	709.9	709.9
	72	209.4	297.6	383.6	469.6	557.8	641.5	654.8	654.8
	79	183.0	260.1	339.5	416.7	496.0	573.2	604.1	604.1
	85	160.9	231.5	302.0	372.6	445.3	515.9	560.0	560.0
	92	143.3	207.2	273.4	337.3	403.4	467.4	520.3	520.3
	98	127.9	187.4	246.9	306.4	366.0	427.7	485.0	485.0
	111	103.6	154.3	207.2	257.9	310.9	361.6	414.5	425.5
	124	83.8	130.1	176.4	220.5	266.8	313.1	359.4	370.4
	138	68.3	110.2	152.1	191.8	233.7	273.4	315.3	326.3
	151	57.3	94.8	132.3	169.8	205.0	242.5	280.0	291.0
	164	46.3	81.6	116.8	149.9	183.0	218.3	251.3	260.1
	177	37.5	70.5	103.6	134.5	165.3	196.2	227.1	229.3
	190	30.9	61.7	92.6	121.3	149.9	178.6	205.0	205.0
	203	26.5	55.1	83.8	110.2	136.7	163.1	183.0	183.0

Main boom: 275.6 ft — SL-Radius 49.2 ft

397,000 lb[1)] — 27.6 ft — 360°

	Radius lb	0	110.2	220.5	330.7	440.9	551.2	661.4	716.5
	ft	1,000 lb							
SSL	39	549.0	595.2	601.9	–	–	–	–	619.5
	46	423.3	582.0	590.8	599.7	–	–	–	619.5
	52	341.7	471.8	579.8	590.8	604.1	–	–	619.5
	59	282.2	394.6	507.1	584.2	599.7	619.5	–	619.5
	65	238.1	337.3	434.3	531.3	586.4	608.5	–	608.5
	72	205.0	291.0	379.2	465.2	551.2	588.6	588.6	588.6
	79	178.6	255.7	332.9	412.3	489.4	568.8	568.8	568.8
	85	156.5	227.1	297.6	368.2	438.7	509.3	546.7	546.7
	92	136.7	202.8	266.8	332.9	396.8	460.8	522.5	522.5
	98	121.3	180.8	242.5	302.0	361.6	421.1	480.6	491.6
	111	97.0	149.9	200.6	253.5	304.2	357.1	407.9	421.1
	124	77.2	123.5	169.8	216.1	262.4	306.4	352.7	366.0
	138	61.7	105.8	145.5	187.4	227.1	269.0	308.6	321.9
	151	48.5	88.2	125.7	163.1	200.6	235.9	273.4	286.6
	164	39.7	75.0	110.2	143.3	176.4	211.6	244.7	255.7
	177	30.9	63.9	97.0	127.9	158.7	189.6	220.5	231.5
	190	24.3	55.1	83.8	114.6	143.3	172.0	200.6	211.6
	203	17.6	46.3	75.0	103.6	130.1	156.5	183.0	191.8
	216	13.2	39.7	66.1	92.6	116.8	143.3	167.6	169.8
	230	–	33.1	59.5	83.8	108.0	132.3	152.1	152.1
	243	–	28.7	52.9	75.0	99.2	121.3	134.5	134.5

Main boom: 255.9 ft — SL-Radius 49.2 ft

	Radius lb	0	110.2	220.5	330.7	440.9	551.2	661.4	716.5
	ft	1,000 lb							
SSL	39	553.4	659.2	668.0	674.6	–	–	–	694.5
	46	427.7	584.2	650.4	663.6	–	–	–	694.5
	52	343.9	476.2	606.3	652.6	672.4	–	–	694.5
	59	286.6	399.0	509.3	621.7	661.4	685.6	–	685.6
	65	242.5	339.5	438.7	535.7	632.7	657.0	657.0	657.0
	72	209.4	295.4	381.4	469.6	555.6	626.1	626.1	626.1
	79	180.8	260.1	337.3	414.5	493.8	571.0	595.2	595.2
	85	158.7	229.3	302.0	372.6	443.1	513.7	564.4	564.4
	92	141.4	205.0	271.2	335.1	401.2	465.2	531.3	533.5
	98	125.7	185.2	244.7	304.2	366.0	425.5	485.0	496.0
	111	101.4	152.1	205.0	255.7	308.6	359.4	412.3	423.3
	124	81.6	127.9	174.2	220.5	264.6	310.9	357.1	370.4
	138	66.1	108.0	149.9	189.6	231.5	271.2	313.1	326.3
	151	52.9	92.6	130.1	167.6	202.8	240.3	277.8	291.0
	164	44.1	79.4	114.6	147.7	180.8	216.1	249.1	260.1
	177	35.3	68.3	101.4	132.3	163.1	194.0	224.9	235.9
	190	28.7	59.5	90.4	119.0	147.7	176.4	205.0	213.8
	203	22.0	50.7	79.4	108.0	134.5	160.9	187.4	191.8
	216	17.6	44.1	70.5	97.0	121.3	147.7	169.8	169.8
	230	13.2	39.7	63.9	88.2	112.4	136.7	147.7	147.7

Remarks

1) with 132,000 lb central ballast

Superlift mast 98.4 ft

Lifting capacities main boom with Superlift

Main boom: 295.3 ft — SL-Radius 49.2 ft

397,000 lb[1] — 27.6 ft — 360°

	Radius	lb 0	110.2	220.5	330.7	440.9	551.2	661.4	716.5
	ft			1,000 lb					
SSL/LSL	39	526.9	526.9	529.1	–	–	–	–	546.7
	46	438.7	526.9	529.1	535.7	–	–	–	546.7
	52	354.9	487.2	529.1	535.7	–	–	–	546.7
	59	297.6	407.9	520.3	535.7	540.1	–	–	546.7
	65	253.5	350.5	447.5	533.5	537.9	–	–	542.3
	72	218.3	304.2	392.4	478.4	522.5	531.3	–	531.3
	79	191.8	269.0	346.1	425.5	502.7	518.1	–	518.1
	85	169.8	240.3	310.9	381.4	451.9	507.1	507.1	507.1
	92	149.9	216.1	280.0	343.9	410.1	474.0	493.8	493.8
	98	134.5	194.0	253.5	315.3	374.8	434.3	467.4	467.4
	111	110.2	160.9	213.8	264.6	317.5	368.2	421.1	421.1
	124	90.4	136.7	183.0	227.1	273.4	319.7	363.8	372.6
	138	75.0	116.8	156.5	198.4	240.3	280.0	321.9	330.7
	151	61.7	101.4	136.7	174.2	211.6	249.1	284.4	295.4
	164	52.9	88.2	121.3	154.3	189.6	222.7	255.7	266.8
	177	44.1	77.2	108.0	138.9	169.8	200.6	231.5	240.3
	190	35.3	66.1	97.0	125.7	154.3	183.0	211.6	216.1
	203	28.7	57.3	86.0	112.4	138.9	165.3	194.0	194.0
	216	24.3	50.7	77.2	103.6	127.9	152.1	174.2	174.2
	230	19.8	44.1	70.5	92.6	116.8	141.1	158.7	158.7
	243	15.4	39.7	61.7	86.0	108.0	130.1	147.7	147.7
	256	13.2	35.3	57.3	79.4	99.2	121.3	136.7	136.7

Main boom: 315.0 ft — SL-Radius 49.2 ft

	Radius	lb 0	110.2	220.5	330.7	440.9	551.2	661.4	716.5
	ft			1,000 lb					
SSL/LSL	39	456.4	456.4	458.6	–	–	–	–	474.0
	46	438.7	454.2	456.4	–	–	–	–	471.8
	52	354.9	449.7	454.2	460.8	–	–	–	469.6
	59	295.4	407.9	451.9	458.6	–	–	–	467.4
	65	251.3	350.5	447.5	456.4	460.8	–	–	465.2
	72	218.3	304.2	390.2	449.7	454.2	–	–	460.8
	79	189.6	269.0	346.1	425.5	445.3	451.9	–	451.9
	85	167.6	238.1	310.9	381.4	436.5	445.3	–	445.3
	92	149.9	213.8	280.0	343.9	410.1	438.7	438.7	438.7
	98	134.5	194.0	253.5	313.1	372.6	427.7	427.7	427.7
	111	110.2	160.9	211.6	264.6	315.3	368.2	392.4	392.4
	124	90.4	136.7	180.8	227.1	273.4	317.5	359.4	359.4
	138	75.0	116.8	156.5	198.4	238.1	280.0	319.7	326.3
	151	61.7	99.2	136.7	174.2	211.6	246.9	284.4	295.4
	164	50.7	86.0	121.3	154.3	187.4	222.7	255.7	264.6
	177	41.9	75.0	105.8	138.9	169.8	200.6	231.5	240.3
	190	35.3	66.1	94.8	123.5	152.1	180.8	209.4	220.5
	203	28.7	57.3	86.0	112.4	138.9	165.3	191.8	200.6
	216	24.3	50.7	77.2	101.4	125.7	152.1	176.4	183.0
	230	17.6	44.1	68.3	92.6	116.8	138.9	163.1	167.6
	243	13.2	37.5	61.7	83.8	105.8	127.9	149.9	152.1
	256	11.0	33.1	55.1	77.2	99.2	119.0	141.1	141.1
	269	–	28.7	50.7	70.5	90.4	110.2	127.9	127.9

Remarks

[1] with 132,000 lb central ballast

Superlift mast 98.4 ft

Main boom: 334.6 ft — SL-Radius 49.2 ft

397,000 lb[1] — 27.6 ft — 360°

	Radius	lb 0	110.2	220.5	330.7	440.9	551.2	661.4	716.5
	ft			1,000 lb					
SSL/LSL	46	381.4	385.8	388.0	–	–	–	–	399.0
	52	354.9	383.6	383.6	–	–	–	–	394.6
	59	295.4	379.2	381.4	383.6	–	–	–	392.4
	65	251.3	348.3	377.0	379.2	–	–	–	388.0
	72	218.3	304.2	372.6	377.0	–	–	–	383.6
	79	189.6	269.0	346.1	372.6	377.0	–	–	379.2
	85	167.6	238.1	308.6	370.4	372.6	–	–	374.8
	92	149.9	213.8	277.8	343.9	368.2	370.4	–	370.4
	98	134.5	194.0	253.5	313.1	363.8	366.0	–	366.0
	111	108.0	160.9	211.6	264.6	315.3	343.9	–	343.9
	124	90.4	134.5	180.8	227.1	271.2	317.5	319.7	319.7
	138	72.8	114.6	156.5	196.2	238.1	277.8	295.4	295.4
	151	61.7	99.2	136.7	174.2	209.4	246.9	273.4	273.4
	164	50.7	86.0	119.0	154.3	187.4	220.5	251.3	251.3
	177	41.9	75.0	105.8	136.7	167.6	198.4	229.3	233.7
	190	33.1	63.9	94.8	123.5	152.1	180.8	209.4	213.8
	203	26.5	55.1	83.8	110.2	138.9	165.3	191.8	196.2
	216	22.0	48.5	75.0	101.4	125.7	149.9	176.4	180.8
	230	17.6	41.9	66.1	92.6	114.6	138.9	160.9	167.6
	243	13.2	37.5	59.5	83.8	105.8	127.9	149.9	154.3
	256	8.8	30.9	52.9	77.2	97.0	119.0	138.9	141.1
	269	–	26.5	48.5	68.3	90.4	110.2	130.1	132.3
	282	–	24.3	44.1	63.9	83.8	101.4	119.0	119.0
	295	–	19.8	39.7	57.3	77.2	94.8	105.8	105.8

Main boom: 354.3 ft — SL-Radius 49.2 ft

	Radius	lb 0	110.2	220.5	330.7	440.9	551.2	661.4	716.5
	ft			1,000 lb					
SSL/LSL	46	324.1	324.1	–	–	–	–	–	337.3
	52	315.3	317.5	319.7	–	–	–	–	330.7
	59	293.2	308.6	313.1	–	–	–	–	324.1
	65	249.1	302.0	306.4	–	–	–	–	319.7
	72	216.1	295.4	302.0	306.4	–	–	–	313.1
	79	187.4	266.8	295.4	302.0	–	–	–	306.4
	85	165.3	235.9	288.8	295.4	–	–	–	299.8
	92	147.7	211.6	275.6	288.8	291.0	–	–	293.2
	98	132.3	191.8	251.3	282.2	284.4	–	–	286.6
	111	105.8	158.7	209.4	262.4	271.2	–	–	273.4
	124	86.0	132.3	178.6	224.9	257.9	262.4	–	262.4
	138	70.5	112.4	154.3	194.0	235.9	251.3	–	251.3
	151	57.3	97.0	134.5	169.8	207.2	238.1	238.1	238.1
	164	48.5	83.8	116.8	152.1	185.2	218.3	227.1	227.1
	177	39.7	70.5	103.6	134.5	165.3	196.2	216.1	216.1
	190	30.9	61.7	92.6	121.3	149.9	178.6	205.0	205.0
	203	24.3	52.9	81.6	108.0	134.5	163.1	189.6	194.0
	216	19.8	46.3	72.8	99.2	123.5	147.7	174.2	183.0
	230	13.2	39.7	63.9	88.2	112.4	136.7	158.7	169.8
	243	11.0	33.1	57.3	81.6	103.6	125.7	147.7	154.3
	256	–	28.7	50.7	72.8	94.8	116.8	136.7	143.3
	269	–	24.3	46.3	66.1	88.2	108.0	127.9	130.1
	282	–	19.8	39.7	59.5	81.6	99.2	119.0	119.0
	295	–	17.6	35.3	55.1	75.0	92.6	108.0	108.0
	308	–	13.2	30.9	50.7	68.3	86.0	97.0	97.0

Lifting capacities main boom with Superlift

Main boom: 374.0 ft — SL-Radius 49.2 ft

397,000 lb[1)] — 27.6 ft — 360°

	Radius ft	lb 0	110.2	220.5	330.7	440.9	551.2	661.4	716.5
		1,000 lb							
SSL/LSL	46	284.4	284.4	–	–	–	–	–	295.4
	52	277.8	280.0	–	–	–	–	–	291.0
	59	273.4	275.6	277.8	–	–	–	–	288.8
	65	249.1	273.4	275.6	–	–	–	–	284.4
	72	213.8	269.0	271.2	–	–	–	–	280.0
	79	187.4	264.6	269.0	271.2	–	–	–	277.8
	85	165.3	235.9	264.6	269.0	–	–	–	273.4
	92	145.5	211.6	262.4	264.6	–	–	–	269.0
	98	130.1	189.6	251.3	262.4	264.6	–	–	264.6
	111	105.8	156.5	209.4	255.7	255.7	–	–	257.9
	124	86.0	132.3	178.6	222.7	244.7	249.1	–	249.1
	138	70.5	112.4	152.1	194.0	233.7	238.1	–	238.1
	151	57.3	97.0	132.3	169.8	207.2	229.3	–	229.3
	164	46.3	81.6	116.8	149.9	183.0	218.3	218.3	218.3
	177	37.5	70.5	103.6	134.5	165.3	196.2	209.4	209.4
	190	30.9	61.7	90.4	119.0	147.7	176.4	200.6	200.6
	203	24.3	52.9	81.6	108.0	134.5	160.9	187.4	189.6
	216	17.6	44.1	70.5	97.0	121.3	147.7	172.0	180.8
	230	13.2	37.5	63.9	88.2	112.4	134.5	158.7	167.6
	243	8.8	33.1	55.1	79.4	101.4	123.5	145.5	154.3
	256	–	26.5	50.7	72.8	94.8	114.6	136.7	143.3
	269	–	22.0	44.1	66.1	86.0	105.8	125.7	130.1
	282	–	19.8	39.7	59.5	79.4	99.2	116.8	121.3
	295	–	15.4	35.3	52.9	72.8	92.6	110.2	110.2
	308	–	11.0	30.9	48.5	66.1	86.0	99.2	99.2
	321	–	8.8	26.5	44.1	61.7	79.4	90.4	90.4

Main boom: 393.7 ft — SL-Radius 49.2 ft

	Radius ft	lb 0	110.2	220.5	330.7	440.9	551.2	661.4	716.5
		1,000 lb							
SSL/LSL	46	262.4	262.4	–	–	–	–	–	269.0
	52	257.9	257.9	–	–	–	–	–	266.8
	59	253.5	255.7	255.7	–	–	–	–	264.6
	65	246.9	251.3	253.5	–	–	–	–	260.1
	72	213.8	249.1	251.3	–	–	–	–	257.9
	79	187.4	244.7	246.9	–	–	–	–	253.5
	85	165.3	235.9	244.7	246.9	–	–	–	251.3
	92	145.5	211.6	240.3	244.7	–	–	–	246.9
	98	130.1	189.6	238.1	240.3	–	–	–	244.7
	111	105.8	156.5	209.4	231.5	233.7	–	–	235.9
	124	86.0	132.3	176.4	222.7	227.1	–	–	229.3
	138	70.5	112.4	152.1	194.0	218.3	220.5	–	220.5
	151	57.3	94.8	132.3	169.8	207.2	213.8	–	213.8
	164	46.3	81.6	116.8	149.9	183.0	205.0	205.0	205.0
	177	37.5	70.5	101.4	132.3	165.3	196.2	198.4	198.4
	190	28.7	59.5	90.4	119.0	147.7	176.4	189.6	189.6
	203	22.0	50.7	79.4	108.0	134.5	160.9	180.8	180.8
	216	17.6	44.1	70.5	97.0	121.3	147.7	172.0	174.2
	230	13.2	37.5	61.7	88.2	110.2	134.5	158.7	165.3
	243	8.8	30.9	55.1	79.4	101.4	123.5	145.5	152.1
	256	–	26.5	48.5	70.5	92.6	114.6	134.5	141.1
	269	–	22.0	44.1	63.9	86.0	105.8	125.7	130.1
	282	–	17.6	37.5	57.3	77.2	97.0	116.8	119.0
	295	–	15.4	33.1	52.9	72.8	90.4	108.0	110.2
	308	–	11.0	28.7	48.5	66.1	83.8	101.4	101.4
	321	–	8.8	26.5	44.1	61.7	79.4	92.6	92.6
	335	–	–	22.0	39.7	55.1	72.8	83.8	83.8
	348	–	–	19.8	35.3	50.7	68.3	75.0	75.0

Main boom: 413.4 ft — SL-Radius 49.2 ft

397,000 lb[1)] — 27.6 ft — 360°

	Radius ft	lb 0	110.2	220.5	330.7	440.9	551.2	661.4	716.5
		1,000 lb							
SSL/LSL	52	233.7	233.7	–	–	–	–	–	240.3
	59	229.3	231.5	–	–	–	–	–	238.1
	65	227.1	229.3	231.5	–	–	–	–	238.1
	72	213.8	227.1	229.3	–	–	–	–	235.9
	79	187.4	224.9	227.1	–	–	–	–	233.7
	85	163.1	222.7	224.9	227.1	–	–	–	231.5
	92	145.5	209.4	224.9	227.1	–	–	–	229.3
	98	130.1	189.6	222.7	224.9	–	–	–	227.1
	111	103.6	156.5	207.2	220.5	222.7	–	–	222.7
	124	83.8	130.1	176.4	216.1	218.3	–	–	218.3
	138	68.3	110.2	152.1	191.8	211.6	213.8	–	213.8
	151	55.1	94.8	132.3	169.8	205.0	207.2	–	207.2
	164	44.1	81.6	114.6	149.9	183.0	200.6	–	200.6
	177	35.3	68.3	101.4	132.3	163.1	194.0	194.0	194.0
	190	28.7	59.5	90.4	119.0	147.7	176.4	187.4	187.4
	203	22.0	50.7	79.4	105.8	132.3	158.7	180.8	180.8
	216	15.4	41.9	70.5	94.8	121.3	145.5	169.8	174.2
	230	11.0	35.3	61.7	86.0	110.2	134.5	156.5	160.9
	243	–	30.9	55.1	77.2	101.4	123.5	145.5	149.9
	256	–	26.5	48.5	70.5	92.6	112.4	134.5	138.9
	269	–	19.8	41.9	63.9	83.8	103.6	123.5	130.1
	282	–	17.6	37.5	57.3	77.2	97.0	114.6	119.0
	295	–	13.2	33.1	50.7	70.5	90.4	108.0	110.2
	308	–	8.8	28.7	46.3	63.9	83.8	101.4	101.4
	321	–	–	24.3	41.9	59.5	77.2	92.6	92.6
	335	–	–	19.8	37.5	55.1	70.5	86.0	86.0
	348	–	–	17.6	33.1	50.7	66.1	77.2	77.2
	361	–	–	15.4	30.9	46.3	61.7	70.5	70.5

Main boom: 433.1 ft — SL-Radius 49.2 ft

	Radius ft	lb 0	110.2	220.5	330.7	440.9	551.2	661.4	716.5
		1,000 lb							
SSL/LSL	52	202.8	202.8	–	–	–	–	–	211.6
	59	198.4	200.6	–	–	–	–	–	209.4
	65	194.0	196.2	–	–	–	–	–	207.2
	72	191.8	194.0	196.2	–	–	–	–	205.0
	79	185.2	191.8	194.0	–	–	–	–	202.8
	85	160.9	189.6	191.8	–	–	–	–	200.6
	92	143.3	187.4	189.6	–	–	–	–	198.4
	98	127.9	185.2	189.6	191.8	–	–	–	196.2
	111	101.4	154.3	185.2	189.6	–	–	–	191.8
	124	81.6	127.9	174.2	187.4	187.4	–	–	189.6
	138	66.1	108.0	149.9	183.0	185.2	–	–	187.4
	151	52.9	92.6	130.1	167.6	180.8	183.0	–	183.0
	164	41.9	79.4	112.4	147.7	176.4	180.8	–	180.8
	177	33.1	66.1	99.2	130.1	160.9	176.4	–	176.4
	190	26.5	57.3	86.0	116.8	145.5	172.0	172.0	172.0
	203	19.8	48.5	77.2	103.6	130.1	156.5	165.3	165.3
	216	13.2	39.7	66.1	92.6	119.0	143.3	160.9	160.9
	230	8.8	33.1	59.5	83.8	108.0	132.3	154.3	154.3
	243	–	28.7	50.7	75.0	99.2	121.3	143.3	145.5
	256	–	22.0	44.1	68.3	90.4	110.2	132.3	134.5
	269	–	17.6	39.7	59.5	81.6	101.4	121.3	125.7
	282	–	13.2	35.3	55.1	75.0	94.8	112.4	114.6
	295	–	11.0	28.7	48.5	68.3	86.0	105.8	108.0
	308	–	–	26.5	44.1	61.7	79.4	99.2	99.2
	321	–	–	22.0	39.7	57.3	75.0	90.4	90.4
	335	–	–	17.6	35.3	50.7	68.3	83.8	83.8
	348	–	–	15.4	30.9	46.3	63.9	77.2	77.2
	361	–	–	13.2	28.7	44.1	59.5	66.1	66.1
	374	–	–	8.8	24.3	39.7	55.1	55.1	55.1

Lifting capacities main boom with Superlift

Main boom: 452.8 ft SL-Radius 49.2 ft

397,000 lb[1)] 27.6 ft 360°

	Radius lb	0	110.2	220.5	330.7	440.9	551.2	606.3
	ft			1,000 lb				
SSL/ LSL	52	174.2	174.2	–	–	–	–	180.8
	59	169.8	169.8	–	–	–	–	176.4
	65	163.1	165.3	–	–	–	–	174.2
	72	158.7	163.1	–	–	–	–	172.0
	79	154.3	158.7	160.9	–	–	–	169.8
	85	152.1	156.5	158.7	–	–	–	165.3
	92	141.1	154.3	156.5	–	–	–	163.1
	98	125.7	149.9	154.3	–	–	–	160.9
	111	101.4	145.5	147.7	152.1	–	–	156.5
	124	79.4	127.9	143.3	147.7	–	–	149.9
	138	63.9	108.0	138.9	141.1	–	–	145.5
	151	50.7	90.4	127.9	136.7	136.7	–	138.9
	164	39.7	77.2	112.4	130.1	132.3	–	134.5
	177	30.9	63.9	97.0	123.5	125.7	–	127.9
	190	24.3	55.1	86.0	114.6	119.0	121.3	121.3
	203	17.6	46.3	75.0	103.6	112.4	114.6	114.6
	216	11.0	37.5	63.9	92.6	105.8	108.0	108.0
	230	–	30.9	57.3	81.6	97.0	101.4	101.4
	243	–	26.5	48.5	72.8	90.4	92.6	92.6
	256	–	19.8	44.1	66.1	93.8	86.0	86.0
	269	–	15.4	37.5	59.5	77.2	79.4	79.4
	282	–	13.2	33.1	52.9	68.3	70.5	70.5
	295	–	8.8	28.7	46.3	61.7	61.7	61.7
	308	–	–	24.3	41.9	52.9	55.1	55.1
	321	–	–	19.8	37.5	44.1	46.3	46.3
	335	–	–	15.4	33.1	37.5	37.5	37.5
	348	–	–	13.2	28.7	28.7	28.7	28.7
	361	–	–	11.0	19.8	19.8	19.8	19.8

Remarks

1) with 132,000 lb central ballast

Superlift mast 98.4 ft

Notes to lifting capacity

Ratings are in compliance with ISO 4305 and DIN 15019.2 (test load = 1.25 x suspended load + 0.1 x dead weight of boom, reduced to boom point).
Weight of hook blocks and slings is part of the load, and is to be deducted from the capacity ratings.

Crane operation is permissible up to a
wind pressure of . . . . . 1.25 lb/ft^2

wind speed of . . . . . 32 ft/s

Consult operation manual for further details on wind speed.
Machine must be on firm and level ground to utilize max. tabulated ratings. Boom lengths and load must be reduced in case of out-of-level conditions or travel on uneven ground.

Note: Data published herein is intended as a guide only and shall not be construed to warrant applicability for lifting purposes. Crane operation is subject to the computer charts and operation manual both supplied with the crane.

Working ranges main boom with Superlift

SSL, SSL/LSL

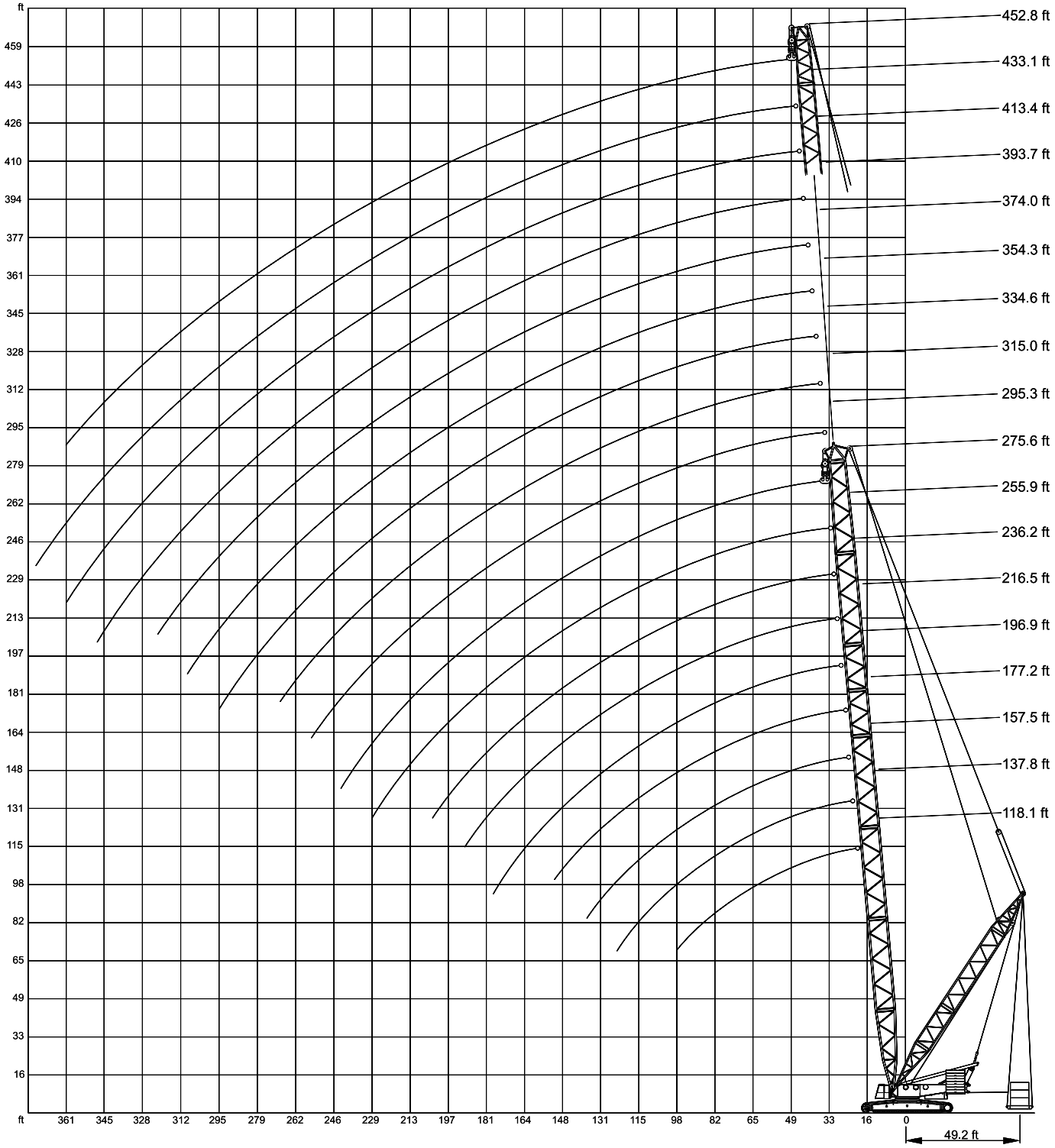

Working ranges fixed fly jib 10°

LF, SH/LH + LF

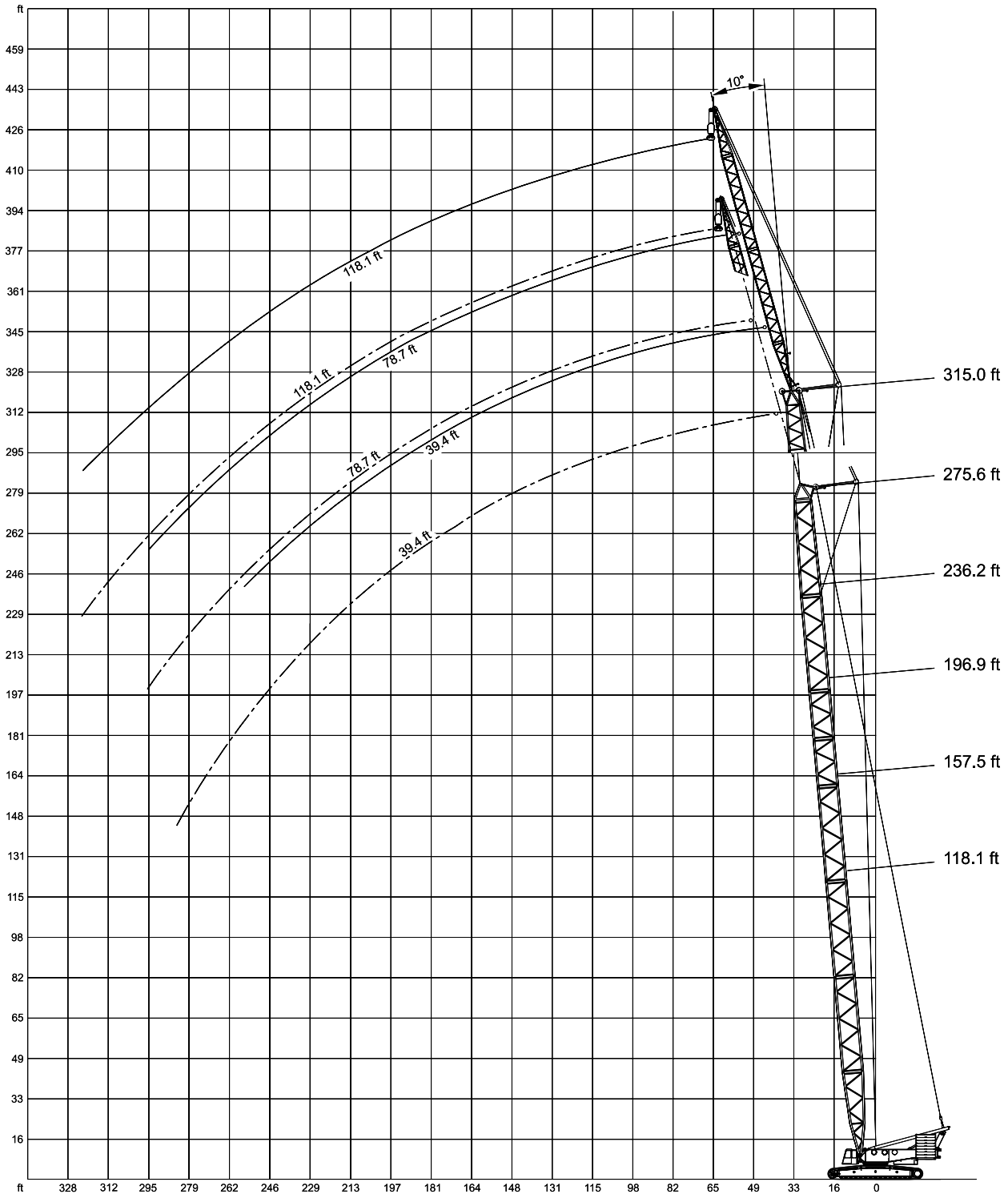

Lifting capacities fixed fly jib

Main boom: 118.1 ft

397,000 lb[1)] **27.6 ft** **360°**

		Fly jib					
		39.4 ft		78.7 ft		118.1 ft	
Radius	lb	10°	30°	10°	30°	10°	30°
	ft	1,000 lb					
	29	132.3	–	–	–	–	–
	33	132.3	–	–	–	–	–
	39	132.3	–	–	–	–	–
	46	132.3	83.8	101.4	–	–	–
	52	132.3	79.4	90.4	–	70.5	–
	59	132.3	75.0	81.6	–	63.9	–
	65	125.7	70.5	75.0	44.1	57.3	–
	72	114.6	66.1	68.3	41.9	52.9	–
	79	108.0	63.9	63.9	39.7	48.5	–
	85	99.2	61.7	59.5	37.5	44.1	–
LF	92	92.6	59.5	55.1	35.3	41.9	26.5
	98	88.2	57.3	50.7	35.3	37.5	26.5
	111	77.2	52.9	46.3	30.9	33.1	24.3
	124	70.5	50.7	39.7	28.7	28.7	22.0
	138	63.9	–	37.5	26.5	26.5	19.8
	151	–	–	33.1	26.5	24.3	17.6
	164	–	–	30.9	24.3	22.0	17.6
	177	–	–	28.7	–	19.8	15.4
	190	–	–	–	–	17.6	15.4
	203	–	–	–	–	17.6	13.2
	216	–	–	–	–	15.4	–
	230	–	–	–	–	–	–
	243	–	–	–	–	–	–
	256	–	–	–	–	–	–

Main boom: 196.9 ft

397,000 lb[1)] **27.6 ft** **360°**

		Fly jib					
		39.4 ft		78.7 ft		118.1 ft	
Radius	lb	10°	30°	10°	30°	10°	30°
	ft	1,000 lb					
	39	132.3	–	–	–	–	–
	46	132.3	–	–	–	–	–
	52	132.3	83.8	105.8	–	–	–
	59	132.3	81.6	97.0	–	63.9	–
	65	132.3	77.2	88.2	–	63.9	–
	72	132.3	75.0	81.6	44.1	61.7	–
	79	132.3	72.8	77.2	41.9	57.3	–
	85	132.3	70.5	72.8	39.7	52.9	–
	92	123.5	68.3	68.3	39.7	50.7	–
	98	116.8	66.1	63.9	37.5	46.3	26.5
LF	111	105.8	61.7	57.3	35.3	41.9	24.3
	124	97.0	59.5	52.9	33.1	37.5	22.0
	138	83.8	55.1	48.5	30.9	33.1	22.0
	151	72.8	52.9	44.1	28.7	30.9	19.8
	164	61.7	50.7	39.7	28.7	28.7	19.8
	177	55.1	50.7	37.5	26.5	26.5	17.6
	190	46.3	–	35.3	26.5	24.3	17.6
	203	41.9	–	33.1	24.3	22.0	15.4
	216	–	–	30.9	24.3	19.8	15.4
	230	–	–	30.9	–	19.8	15.4
	243	–	–	28.7	–	17.6	13.2
	256	–	–	–	–	17.6	13.2
	269	–	–	–	–	15.4	–
	282	–	–	–	–	15.4	–

Main boom: 157.5 ft

397,000 lb[1)] **27.6 ft** **360°**

		Fly jib					
		39.4 ft		78.7 ft		118.1 ft	
Radius	lb	10°	30°	10°	30°	10°	30°
	ft	1,000 lb					
	33	132.3	–	–	–	–	–
	39	132.3	–	–	–	–	–
	46	132.3	86.0	108.0	–	–	–
	52	132.3	81.6	99.2	–	68.3	–
	59	132.3	77.2	90.4	–	66.1	–
	65	132.3	75.0	81.6	–	61.7	–
	72	132.3	70.5	75.0	44.1	57.3	–
	79	125.7	68.3	70.5	41.9	52.9	–
	85	116.8	66.1	66.1	39.7	48.5	–
	92	110.2	63.9	61.7	37.5	46.3	28.7
	98	103.6	61.7	57.3	35.3	41.9	26.5
	111	92.6	57.3	50.7	33.1	37.5	24.3
LF	124	83.8	55.1	46.3	30.9	33.1	22.0
	138	77.2	52.9	41.9	28.7	30.9	19.8
	151	70.5	50.7	39.7	28.7	26.5	19.8
	164	66.1	–	35.3	26.5	24.3	17.6
	177	59.5	–	33.1	26.5	22.0	17.6
	190	–	–	30.9	24.3	22.0	15.4
	203	–	–	28.7	–	19.8	15.4
	216	–	–	28.7	–	17.6	15.4
	230	–	–	–	–	17.6	13.2
	243	–	–	–	–	15.4	–
	256	–	–	–	–	–	–
	269	–	–	–	–	–	–
	282	–	–	–	–	–	–
	295	–	–	–	–	–	–
	308	–	–	–	–	–	–

Main boom: 236.2 ft

397,000 lb[1)] **27.6 ft** **360°**

		Fly jib					
		39.4 ft		78.7 ft		118.1 ft	
Radius	lb	10°	30°	10°	30°	10°	30°
	ft	1,000 lb					
	39	132.3	–	–	–	–	–
	46	132.3	–	–	–	–	–
	52	132.3	86.0	110.2	–	–	–
	59	132.3	81.6	101.4	–	–	–
	65	132.3	79.4	94.8	–	63.9	–
	72	132.3	77.2	88.2	–	61.7	–
	79	132.3	75.0	81.6	41.9	59.5	–
	85	132.3	72.8	77.2	41.9	55.1	–
	92	132.3	70.5	72.8	39.7	52.9	–
	98	130.1	68.3	68.3	39.7	50.7	26.5
	111	110.2	63.9	61.7	35.3	44.1	26.5
	124	92.6	61.7	57.3	35.3	39.7	24.3
LF	138	79.4	59.5	52.9	33.1	37.5	22.0
	151	66.1	57.3	48.5	30.9	33.1	19.8
	164	57.3	55.1	44.1	28.7	30.9	19.8
	177	48.5	50.7	41.9	28.7	28.7	17.6
	190	41.9	44.1	39.7	26.5	26.5	17.6
	203	35.3	37.5	37.5	26.5	24.3	17.6
	216	28.7	–	33.1	24.3	22.0	15.4
	230	24.3	–	28.7	24.3	22.0	15.4
	243	19.8	–	24.3	24.3	19.8	15.4
	256	–	–	19.8	–	19.8	13.2
	269	–	–	17.6	–	17.6	13.2
	282	–	–	15.4	–	17.6	13.2
	295	–	–	–	–	15.4	–
	308	–	–	–	–	11.0	–
	321	–	–	–	–	8.8	–

Remarks [1)] with 132,000 lb central ballast

Lifting capacities fixed fly jib

Main boom: 275.6 ft

397,000 lb[1)] **27.6 ft** **360°**

		Fly jib					
		39.4 ft		78.7 ft		118.1 ft	
Radius	lb	10°	30°	10°	30°	10°	30°
	ft	1,000 lb					
	46	132.3	–	–	–	–	–
	52	132.3	–	–	–	–	–
	59	132.3	83.8	105.8	–	–	–
	65	132.3	81.6	99.2	–	63.9	–
	72	132.3	79.4	92.6	–	61.7	–
	79	132.3	77.2	88.2	44.1	59.5	–
	85	132.3	75.0	81.6	41.9	57.3	–
	92	132.3	72.8	77.2	39.7	55.1	–
	98	130.1	70.5	75.0	39.7	52.9	–
	111	105.8	66.1	66.1	37.5	48.5	26.5
	124	88.2	63.9	61.7	35.3	41.9	24.3
	138	75.0	61.7	57.3	33.1	39.7	22.0
	151	61.7	59.5	52.9	30.9	35.3	22.0
LF	164	50.7	55.1	48.5	30.9	33.1	19.8
	177	41.9	46.3	46.3	28.7	30.9	19.8
	190	35.3	37.5	39.7	28.7	28.7	17.6
	203	28.7	30.9	33.1	26.5	26.5	17.6
	216	24.3	26.5	28.7	26.5	24.3	15.4
	230	19.8	19.8	24.3	26.5	24.3	15.4
	243	15.4	–	19.8	22.0	22.0	15.4
	256	11.0	–	15.4	17.6	17.6	15.4
	269	6.6	–	11.0	13.2	15.4	13.2
	282	4.4	–	8.8	–	11.0	13.2
	295	–	–	6.6	–	8.8	11.0
	308	–	–	–	–	6.6	8.8
	321	–	–	–	–	4.4	–
	335	–	–	–	–	–	–
	348	–	–	–	–	–	–

Main boom: 275.6 ft

397,000 lb[1)] **27.6 ft** **360°**

		Fly jib					
		39.4 ft		78.7 ft		118.1 ft	
Radius	lb	10°	30°	10°	30°	10°	30°
	ft	1,000 lb					
	46	132.3	–	–	–	–	–
	52	132.3	–	–	–	–	–
	59	132.3	88.2	110.2	–	–	–
	65	132.3	83.8	103.6	–	61.7	–
	72	132.3	81.6	99.2	–	61.7	–
	79	132.3	79.4	94.8	44.1	59.5	–
	85	132.3	77.2	88.2	44.1	57.3	–
	92	132.3	75.0	83.8	41.9	55.1	–
	98	132.3	72.8	79.4	41.9	52.9	–
	111	112.4	68.3	70.5	37.5	50.7	26.5
	124	92.6	66.1	63.9	37.5	46.3	24.3
SH/	138	79.4	63.9	59.5	35.3	41.9	24.3
LH	151	66.1	59.5	55.1	33.1	37.5	22.0
+	164	57.3	57.3	50.7	30.9	35.3	19.8
LF	177	48.5	50.7	46.3	30.9	33.1	19.8
	190	41.9	44.1	44.1	28.7	28.7	17.6
	203	35.3	37.5	39.7	28.7	28.7	17.6
	216	28.7	30.9	33.1	26.5	26.5	17.6
	230	24.3	26.5	28.7	26.5	24.3	15.4
	243	19.8	22.0	24.3	24.3	22.0	15.4
	256	17.6	–	19.8	22.0	22.0	15.4
	269	13.2	–	17.6	19.8	19.8	15.4
	282	11.0	–	13.2	–	15.4	13.2
	295	–	–	11.0	–	13.2	13.2
	308	–	–	8.8	–	11.0	13.2
	321	–	–	6.6	–	8.8	–
	335	–	–	–	–	6.6	–
	348	–	–	–	–	4.4	–

Main boom: 236.2 ft

397,000 lb[1)] **27.6 ft** **360°**

		Fly jib					
		39.4 ft		78.7 ft		118.1 ft	
Radius	lb	10°	30°	10°	30°	10°	30°
	ft	1,000 lb					
	39	132.3	–	–	–	–	–
	46	132.3	–	–	–	–	–
	52	132.3	88.2	110.2	–	–	–
	59	132.3	86.0	108.0	–	–	–
	65	132.3	81.6	101.4	–	61.7	–
	72	132.3	79.4	94.8	–	59.5	–
	79	132.3	77.2	88.2	44.1	57.3	–
	85	132.3	75.0	81.6	41.9	55.1	–
	92	132.3	72.8	77.2	41.9	52.9	–
	98	132.3	70.5	72.8	39.7	50.7	28.7
SH/	111	114.6	66.1	66.1	37.5	46.3	26.5
LH	124	97.0	63.9	59.5	35.3	41.9	24.3
+	138	81.6	59.5	55.1	33.1	37.5	22.0
LF	151	70.5	57.3	50.7	30.9	35.3	22.0
	164	61.7	55.1	46.3	30.9	33.1	19.8
	177	52.9	52.9	44.1	28.7	28.7	19.8
	190	44.1	46.3	39.7	28.7	26.5	17.6
	203	39.7	39.7	37.5	26.5	24.3	17.6
	216	33.1	–	35.3	26.5	24.3	15.4
	230	28.7	–	33.1	24.3	22.0	15.4
	243	24.3	–	28.7	24.3	19.8	15.4
	256	–	–	24.3	–	19.8	15.4
	269	–	–	19.8	–	17.6	13.2
	282	–	–	17.6	–	17.6	13.2
	295	–	–	–	–	17.6	–
	308	–	–	–	–	15.4	–
	321	–	–	–	–	13.2	–

Main boom: 315.0 ft

397,000 lb[1)] **27.6 ft** **360°**

		Fly jib					
		39.4 ft		78.7 ft		118.1 ft	
Radius	lb	10°	30°	10°	30°	10°	30°
	ft	1,000 lb					
	52	132.3	–	–	–	–	–
	59	132.3	88.2	99.2	–	–	–
	65	132.3	86.0	99.2	–	–	–
	72	132.3	83.8	94.8	–	59.5	–
	79	132.3	81.6	92.6	–	59.5	–
	85	132.3	79.4	90.4	44.1	57.3	–
	92	132.3	77.2	88.2	41.9	55.1	–
	98	132.3	75.0	83.8	41.9	52.9	–
	111	108.0	70.5	75.0	39.7	48.5	26.5
	124	90.4	68.3	68.3	37.5	46.3	24.3
SH/	138	75.0	66.1	63.9	35.3	41.9	24.3
LH	151	63.9	61.7	59.5	33.1	39.7	22.0
+	164	52.9	57.3	55.1	33.1	37.5	22.0
LF	177	44.1	46.3	48.5	30.9	35.3	19.8
	190	37.5	39.7	41.9	30.9	33.1	19.8
	203	30.9	33.1	35.3	28.7	30.9	17.6
	216	26.5	26.5	28.7	28.7	28.7	17.6
	230	19.8	22.0	24.3	26.5	26.5	17.6
	243	15.4	17.6	19.8	24.3	22.0	15.4
	256	13.2	13.2	15.4	19.8	17.6	15.4
	269	–	11.0	13.2	15.4	15.4	15.4
	282	–	–	8.8	11.0	11.0	15.4
	295	–	–	6.6	8.8	8.8	13.2
	308	–	–	–	6.6	6.6	8.8
	321	–	–	–	–	4.4	6.6
	335	–	–	–	–	–	4.4
	348	–	–	–	–	–	–

Remarks [1)] with 132,000 lb central ballast

Working ranges fixed fly jib 30°

LF, SH/LH + LF

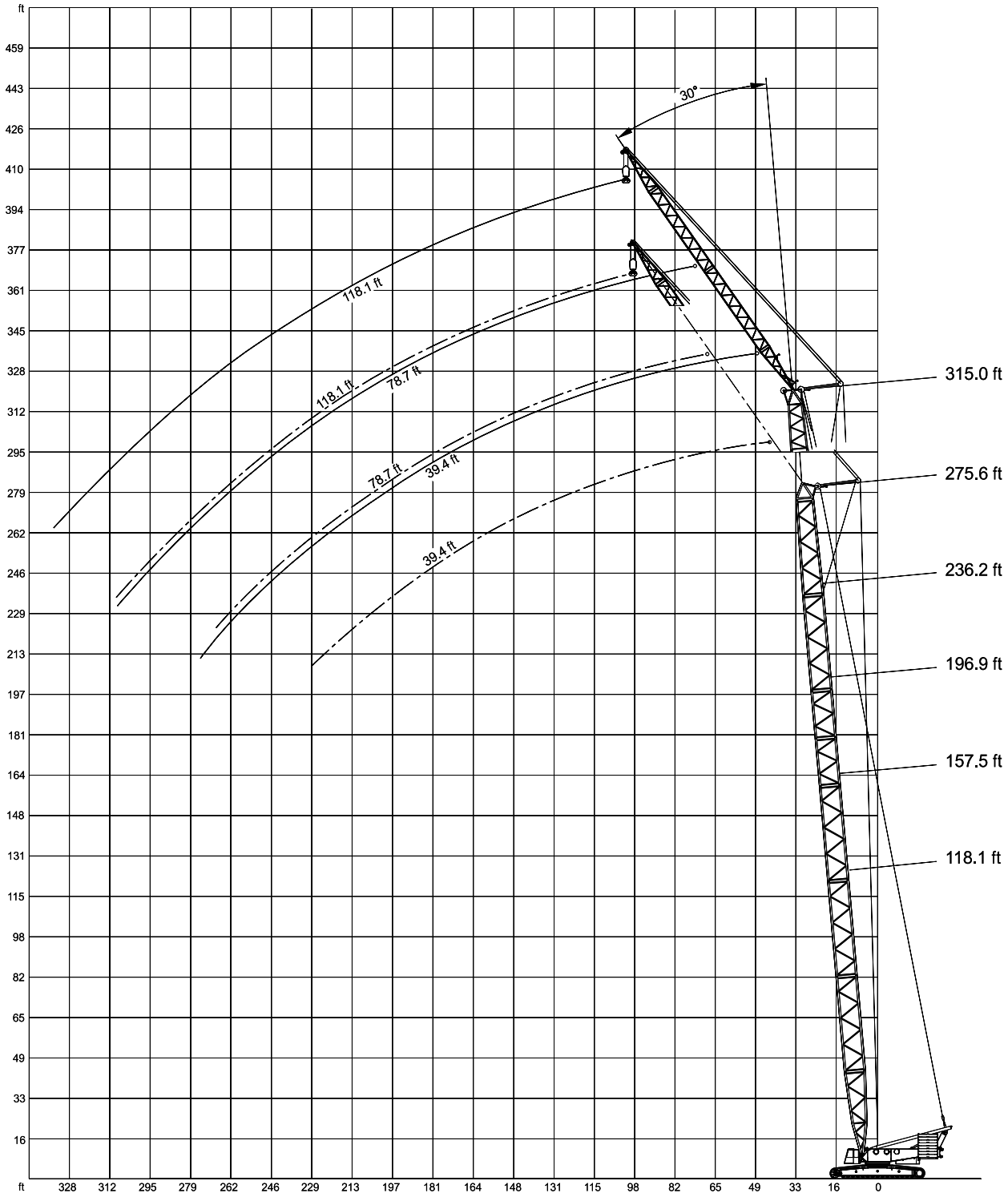

Working ranges fixed fly jib with SL, 10°

SSL + LF, SSL/LSL + LF

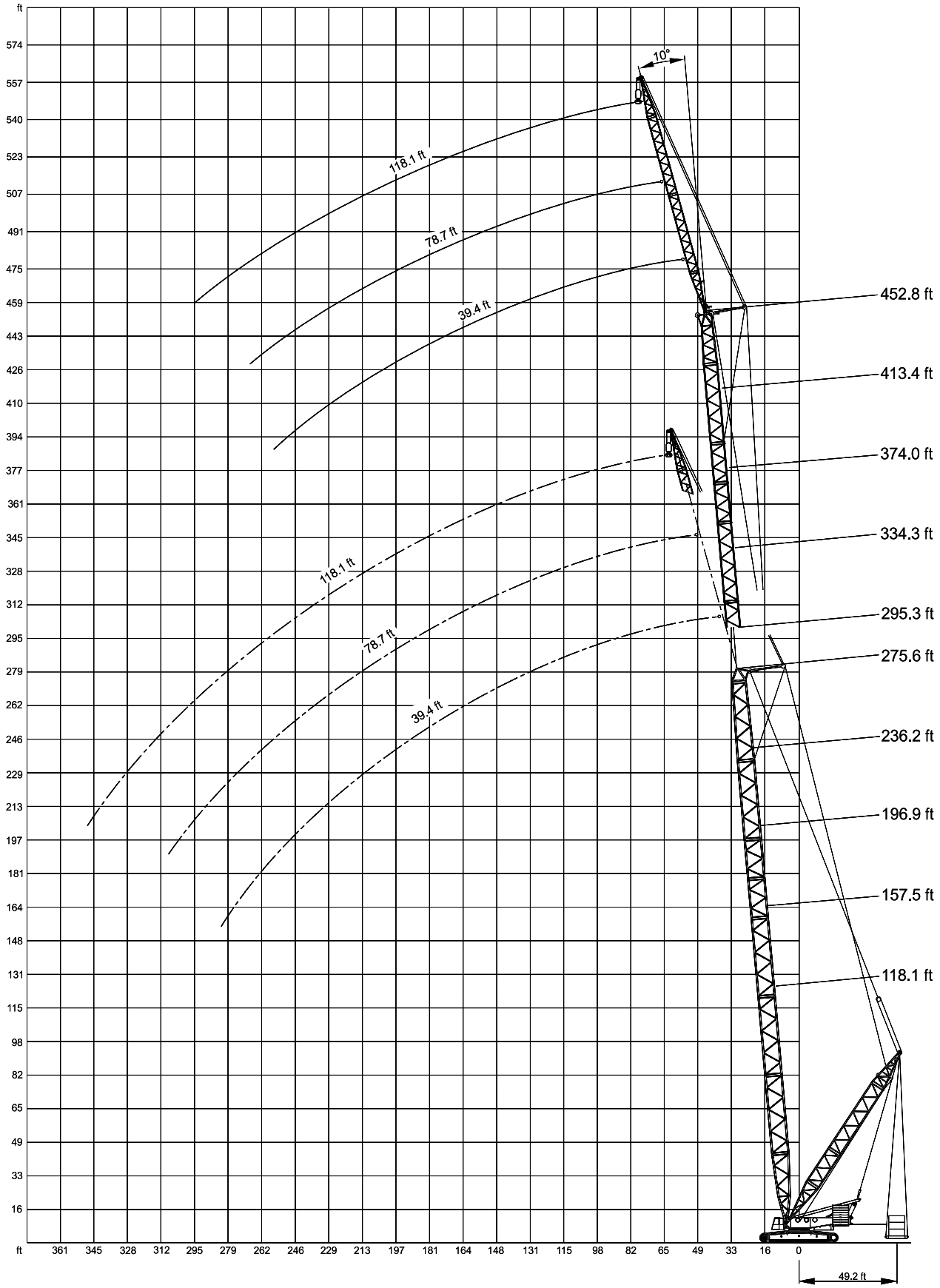

Lifting capacities fixed fly jib with Superlift

Main boom: 118.1 ft

397,000 lb[1)] 27.6 ft SL-Radius 49.2 ft 360° DIN/ISO

		Fly jib											
		39.4 ft				78.7 ft				118.1 ft			
		10°		30°		10°		30°		10°		30°	
Radius		0	165.3	0	165.3	0	165.3	0	165.3	0	165.3	0	165.3
	ft	1,000 lb											
	29	132.3	132.3	–	–	–	–	–	–	–	–	–	–
	33	132.3	132.3	–	–	–	–	–	–	–	–	–	–
	39	132.3	132.3	–	–	–	–	–	–	–	–	–	–
	46	132.3	132.3	83.8	83.8	101.4	101.4	–	–	–	–	–	–
	52	132.3	132.3	79.4	79.4	90.4	90.4	–	–	72.8	72.8	–	–
	59	132.3	132.3	75.0	75.0	81.6	81.6	–	–	63.9	63.9	–	–
	65	125.7	125.7	70.5	70.5	75.0	75.0	44.1	44.1	57.3	57.3	–	–
	72	114.6	114.6	66.1	66.1	68.3	68.3	41.9	41.9	52.9	52.9	–	–
	79	105.8	105.8	63.9	63.9	63.9	63.9	39.7	39.7	48.5	48.5	–	–
SSL+LF	85	99.2	99.2	61.7	61.7	59.5	59.5	37.5	37.5	44.1	44.1	–	–
	92	92.6	92.6	59.5	59.5	55.1	55.1	35.3	35.3	41.9	41.9	26.5	26.5
	98	88.2	88.2	57.3	57.3	50.7	50.7	35.3	35.3	37.5	37.5	26.5	26.5
	111	77.2	77.2	52.9	52.9	46.3	46.3	30.9	30.9	33.1	33.1	24.3	24.3
	124	70.5	70.5	50.7	50.7	39.7	39.7	28.7	28.7	28.7	28.7	22.0	22.0
	138	63.9	63.9	–	–	37.5	37.5	26.5	26.5	26.5	26.5	19.8	19.8
	151	–	–	–	–	33.1	33.1	26.5	26.5	24.3	24.3	17.6	17.6
	164	–	–	–	–	30.9	30.9	24.3	24.3	22.0	22.0	17.6	17.6
	177	–	–	–	–	28.7	28.7	–	–	19.8	19.8	15.4	15.4
	190	–	–	–	–	–	–	–	–	17.6	17.6	15.4	15.4
	203	–	–	–	–	–	–	–	–	17.6	17.6	13.2	13.2
	216	–	–	–	–	–	–	–	–	15.4	15.4	–	–

Main boom: 157.5 ft

	ft	1,000 lb											
	33	132.3	132.3	–	–	–	–	–	–	–	–	–	–
	39	132.3	132.3	–	–	–	–	–	–	–	–	–	–
	46	132.3	132.3	86.0	86.0	108.0	108.0	–	–	–	–	–	–
	52	132.3	132.3	81.6	81.6	99.2	99.2	–	–	–	–	–	–
	59	132.3	132.3	77.2	77.2	90.4	90.4	–	–	68.3	68.3	–	–
	65	132.3	132.3	75.0	75.0	81.6	81.6	–	–	63.9	63.9	–	–
	72	132.3	132.3	70.5	70.5	75.0	75.0	44.1	44.1	57.3	57.3	–	–
	79	125.7	125.7	68.3	68.3	70.5	70.5	41.9	41.9	52.9	52.9	–	–
	85	116.8	116.8	66.1	66.1	66.1	66.1	39.7	39.7	48.5	48.5	–	–
	92	110.2	110.2	63.9	63.9	61.7	61.7	37.5	37.5	46.3	46.3	28.7	28.7
SSL+LF	98	103.6	103.6	61.7	61.7	57.3	57.3	35.3	35.3	41.9	41.9	26.5	26.5
	111	92.6	92.6	57.3	57.3	50.7	50.7	33.1	33.1	37.5	37.5	24.3	24.3
	124	83.8	83.8	55.1	55.1	46.3	46.3	30.9	30.9	33.1	33.1	22.0	22.0
	138	77.2	77.2	52.9	52.9	41.9	41.9	28.7	28.7	30.9	30.9	19.8	19.8
	151	70.5	70.5	50.7	50.7	39.7	39.7	28.7	28.7	26.5	26.5	19.8	19.8
	164	66.1	66.1	–	–	35.3	35.3	26.5	26.5	24.3	24.3	17.6	17.6
	177	61.7	61.7	–	–	33.1	33.1	26.5	26.5	22.0	22.0	17.6	17.6
	190	–	–	–	–	30.9	30.9	24.3	24.3	22.0	22.0	15.4	15.4
	203	–	–	–	–	28.7	28.7	–	–	19.8	19.8	15.4	15.4
	216	–	–	–	–	28.7	28.7	–	–	17.6	17.6	15.4	15.4
	230	–	–	–	–	–	–	–	–	17.6	17.6	13.2	13.2
	243	–	–	–	–	–	–	–	–	15.4	15.4	–	–

Remarks

[1)] with 132,000 lb central ballast

Superlift mast 98.4 ft

Lifting capacities fixed fly jib with Superlift

Main boom: 196.9 ft

397,000 lb[1)] 27.6 ft **SL-Radius 49.2 ft** **360°** **DIN/ISO**

		Fly jib											
		39.4 ft				78.7 ft				118.1 ft			
		10°		30°		10°		30°		10°		30°	
Radius		0	165.3	0	165.3	0	165.3	0	165.3	0	165.3	0	165.3
	ft	1,000 lb											
	39	132.3	132.3	–	–	–	–	–	–	–	–	–	–
	46	132.3	132.3	–	–	–	–	–	–	–	–	–	–
	52	132.3	132.3	83.8	83.8	105.8	105.8	–	–	–	–	–	–
	59	132.3	132.3	81.6	81.6	97.0	97.0	–	–	68.3	68.3	–	–
	65	132.3	132.3	77.2	77.2	88.2	88.2	–	–	66.1	66.1	–	–
	72	132.3	132.3	75.0	75.0	81.6	81.6	44.1	44.1	61.7	61.7	–	–
	79	132.3	132.3	72.8	72.8	77.2	77.2	41.9	41.9	57.3	57.3	–	–
	85	132.3	132.3	70.5	70.5	72.8	72.8	39.7	39.7	52.9	52.9	–	–
	92	123.5	123.5	68.3	68.3	68.3	68.3	39.7	39.7	50.7	50.7	–	–
	98	116.8	116.8	66.1	66.1	63.9	63.9	37.5	37.5	46.3	46.3	26.5	26.5
	111	105.8	105.8	61.7	61.7	57.3	57.3	35.3	35.3	41.9	41.9	24.3	24.3
SSL+LF	124	97.0	97.0	59.5	59.5	52.9	52.9	33.1	33.1	37.5	37.5	22.0	22.0
	138	88.2	88.2	55.1	55.1	48.5	48.5	30.9	30.9	33.1	33.1	22.0	22.0
	151	79.4	81.6	52.9	52.9	44.1	44.1	28.7	28.7	30.9	30.9	19.8	19.8
	164	70.5	75.0	50.7	50.7	39.7	39.7	28.7	28.7	28.7	28.7	19.8	19.8
	177	61.7	70.5	50.7	50.7	37.5	37.5	26.5	26.5	26.5	26.5	17.6	17.6
	190	52.9	66.1	–	–	35.3	35.3	26.5	26.5	24.3	24.3	17.6	17.6
	203	46.3	63.9	–	–	33.1	33.1	24.3	24.3	22.0	22.0	15.4	15.4
	216	–	–	–	–	30.9	30.9	24.3	24.3	19.8	19.8	15.4	15.4
	230	–	–	–	–	30.9	30.9	–	–	19.8	19.8	15.4	15.4
	243	–	–	–	–	28.7	28.7	–	–	17.6	17.6	13.2	13.2
	256	–	–	–	–	–	–	–	–	17.6	17.6	13.2	13.2
	269	–	–	–	–	–	–	–	–	15.4	15.4	–	–
	282	–	–	–	–	–	–	–	–	15.4	15.4	–	–

Main boom: 236.2 ft

	ft	1,000 lb											
	39	132.3	132.3	–	86.0	–	–	–	–	–	–	–	–
	46	132.3	132.3	–	81.6	–	–	–	–	–	–	–	–
	52	132.3	132.3	86.0	79.4	110.2	110.2	–	–	–	–	–	–
	59	132.3	132.3	81.6	77.2	101.4	101.4	–	–	–	–	–	–
	65	132.3	132.3	79.4	75.0	94.8	94.8	–	–	68.3	68.3	–	–
	72	132.3	132.3	77.2	72.8	88.2	88.2	–	–	63.9	63.9	–	–
	79	132.3	132.3	75.0	70.5	81.6	81.6	41.9	41.9	61.7	61.7	–	–
	85	132.3	132.3	72.8	68.3	77.2	77.2	41.9	41.9	57.3	57.3	–	–
	92	132.3	132.3	70.5	63.9	72.8	72.8	39.7	39.7	52.9	52.9	–	–
	98	130.1	130.1	68.3	61.7	68.3	68.3	39.7	39.7	50.7	50.7	26.5	26.5
	111	116.8	116.8	63.9	59.5	61.7	61.7	35.3	35.3	44.1	44.1	26.5	26.5
	124	101.4	108.0	61.7	57.3	57.3	57.3	35.3	35.3	39.7	39.7	24.3	24.3
SSL+LF	138	88.2	99.2	59.5	55.1	52.9	52.9	33.1	33.1	37.5	37.5	22.0	22.0
	151	75.0	90.4	57.3	52.9	48.5	48.5	30.9	30.9	33.1	33.1	19.8	19.8
	164	63.9	86.0	55.1	50.7	44.1	44.1	28.7	28.7	30.9	30.9	19.8	19.8
	177	55.1	79.4	52.9	50.7	41.9	41.9	28.7	28.7	28.7	28.7	17.6	17.6
	190	48.5	75.0	50.7	–	39.7	39.7	26.5	26.5	26.5	26.5	17.6	17.6
	203	41.9	70.5	44.1	–	37.5	37.5	26.5	26.5	24.3	24.3	17.6	17.6
	216	35.3	68.3	–	–	35.3	35.3	24.3	24.3	22.0	22.0	15.4	15.4
	230	30.9	63.9	–	–	33.1	33.1	24.3	24.3	22.0	22.0	15.4	15.4
	243	26.5	61.7	–	–	30.9	30.9	24.3	24.3	19.8	19.8	15.4	15.4
	256	–	–	–	–	26.5	30.9	–	–	19.8	19.8	13.2	13.2
	269	–	–	–	–	22.0	28.7	–	–	17.6	17.6	13.2	13.2
	282	–	–	–	–	19.8	28.7	–	–	17.6	17.6	13.2	13.2
	295	–	–	–	–	–	–	–	–	15.4	15.4	–	–
	308	–	–	–	–	–	–	–	–	15.4	15.4	–	–
	321	–	–	–	–	–	–	–	–	13.2	15.4	–	–

Remarks

[1)] with 132,000 lb central ballast Superlift mast 98.4 ft

Lifting capacities fixed fly jib with Superlift

Main boom: 275.6 ft

397,000 lb[1)] 27.6 ft **SL-Radius 49.2 ft** **360°** **DIN/ISO**

		Fly jib											
		39.4 ft				78.7 ft				118.1 ft			
		10°		30°		10°		30°		10°		30°	
Radius		0	275.6	0	165.3	0	165.3	0	165.3	0	165.3	0	165.3
	ft	1,000 lb											
	46	132.3	132.3	–	–	–	–	–	–	–	–	–	–
	52	132.3	132.3	–	–	–	–	–	–	–	–	–	–
	59	132.3	132.3	83.8	83.8	105.8	105.8	–	–	–	–	–	–
	65	132.3	132.3	81.6	81.6	99.2	99.2	–	–	63.9	63.9	–	–
	72	132.3	132.3	79.4	79.4	92.6	92.6	–	–	63.9	63.9	–	–
	79	132.3	132.3	77.2	77.2	88.2	88.2	44.1	44.1	61.7	61.7	–	–
	85	132.3	132.3	75.0	75.0	81.6	81.6	41.9	41.9	59.5	59.5	–	–
	92	132.3	132.3	72.8	72.8	77.2	77.2	39.7	39.7	57.3	57.3	–	–
	98	132.3	132.3	70.5	70.5	75.0	75.0	39.7	39.7	52.9	52.9	–	–
	111	116.8	127.9	66.1	66.1	66.1	66.1	37.5	37.5	48.5	48.5	26.5	26.5
	124	97.0	116.8	63.9	63.9	61.7	61.7	35.3	35.3	41.9	41.9	24.3	24.3
	138	81.6	108.0	61.7	61.7	57.3	57.3	33.1	33.1	39.7	39.7	22.0	22.0
	151	70.5	101.4	59.5	59.5	52.9	52.9	30.9	30.9	35.3	35.3	22.0	22.0
SSL+LF	164	59.5	94.8	57.3	57.3	48.5	48.5	30.9	30.9	33.1	33.1	19.8	19.8
	177	50.7	88.2	52.9	55.1	46.3	46.3	28.7	28.7	30.9	30.9	19.8	19.8
	190	41.9	83.8	44.1	52.9	41.9	41.9	28.7	28.7	28.7	28.7	17.6	17.6
	203	35.3	79.4	37.5	52.9	39.7	39.7	26.5	26.5	26.5	26.5	17.6	17.6
	216	30.9	75.0	30.9	50.7	33.1	37.5	26.5	26.5	24.3	24.3	15.4	15.4
	230	24.3	70.5	26.5	48.5	28.7	35.3	26.5	26.5	24.3	24.3	15.4	15.4
	243	19.8	68.3	–	–	24.3	33.1	24.3	24.3	22.0	22.0	15.4	15.4
	256	15.4	63.9	–	–	19.8	33.1	22.0	24.3	19.8	19.8	15.4	15.4
	269	13.2	61.7	–	–	17.6	30.9	19.8	24.3	19.8	19.8	13.2	13.2
	282	8.8	59.5	–	–	13.2	30.9	–	–	15.4	17.6	13.2	13.2
	295	–	–	–	–	11.0	28.7	–	–	13.2	17.6	13.2	13.2
	308	–	–	–	–	8.8	28.7	–	–	11.0	17.6	13.2	13.2
	321	–	–	–	–	–	–	–	–	8.8	15.4	–	–
	335	–	–	–	–	–	–	–	–	6.6	15.4	–	–
	348	–	–	–	–	–	–	–	–	4.4	15.4	–	–

Main boom: 295.3 ft

		0	385.8	0	165.3	0	165.3	0	165.3	0	165.3	0	165.3
	ft	1,000 lb											
	46	132.3	132.3	–	–	–	–	–	–	–	–	–	–
	52	132.3	132.3	–	–	–	–	–	–	–	–	–	–
	59	132.3	132.3	88.2	88.2	110.2	110.2	–	–	–	–	–	–
	65	132.3	132.3	86.0	86.0	103.6	103.6	–	–	63.9	63.9	–	–
	72	132.3	132.3	81.6	81.6	99.2	99.2	–	–	63.9	63.9	–	–
	79	132.3	132.3	79.4	79.4	94.8	94.8	–	–	59.5	59.5	–	–
	85	132.3	132.3	77.2	77.2	90.4	90.4	44.1	44.1	57.3	57.3	–	–
	92	132.3	132.3	75.0	75.0	86.0	86.0	41.9	41.9	55.1	55.1	–	–
	98	132.3	132.3	72.8	72.8	81.6	81.6	41.9	41.9	52.9	52.9	–	–
	111	116.8	132.3	70.5	70.5	72.8	72.8	39.7	39.7	50.7	50.7	26.5	26.5
	124	97.0	125.7	66.1	66.1	66.1	66.1	37.5	37.5	46.3	46.3	24.3	24.3
	138	81.6	116.8	63.9	63.9	61.7	61.7	35.3	35.3	44.1	44.1	24.3	24.3
	151	70.5	108.0	61.7	61.7	57.3	57.3	33.1	33.1	39.7	39.7	22.0	22.0
SSL/LSL +LF	164	59.5	101.4	59.5	59.5	52.9	52.9	30.9	30.9	35.3	35.3	22.0	22.0
	177	50.7	94.8	52.9	57.3	48.5	48.5	30.9	30.9	33.1	33.1	19.8	19.8
	190	41.9	88.2	44.1	55.1	46.3	46.3	28.7	28.7	30.9	30.9	19.8	19.8
	203	35.3	83.8	37.5	52.9	39.7	44.1	28.7	28.7	28.7	28.7	17.6	17.6
	216	28.7	79.4	30.9	52.9	33.1	41.9	26.5	26.5	26.5	26.5	17.6	17.6
	230	24.3	75.0	26.5	50.7	28.7	39.7	26.5	26.5	24.3	24.3	17.6	17.6
	243	19.8	72.8	22.0	50.7	24.3	37.5	26.5	26.5	24.3	24.3	15.4	15.4
	256	15.4	68.3	17.6	48.5	19.8	35.3	22.0	24.3	22.0	22.0	15.4	15.4
	269	13.2	66.1	–	–	15.4	33.1	19.8	24.3	19.8	22.0	15.4	15.4
	282	8.8	63.9	–	–	13.2	33.1	15.4	24.3	15.4	19.8	15.4	15.4
	295	6.6	61.7	–	–	8.8	30.9	–	–	13.2	19.8	13.2	13.2
	308	–	–	–	–	6.6	28.7	–	–	8.8	17.6	13.2	13.2
	321	–	–	–	–	4.4	28.7	–	–	6.6	17.6	11.0	13.2
	335	–	–	–	–	–	28.7	–	–	4.4	17.6	–	–
	348	–	–	–	–	–	–	–	–	–	15.4	–	–
	361	–	–	–	–	–	–	–	–	–	15.4	–	–
	374	–	–	–	–	–	–	–	–	–	15.4	–	–

Lifting capacities fixed fly jib with Superlift

Main boom: 334.7 ft

397,000 lb[1)] **27.6 ft** **SL-Radius 49.2 ft** **360°** **DIN/ISO**

		Fly jib											
		39.4 ft				78.7 ft				118.1 ft			
		10°		30°		10°		30°		10°		30°	
Radius		0	385.8	0	275.6	0	275.6	0	165.3	0	165.3	0	165.3
	ft	1,000 lb											
	52	132.3	132.3	–	–	–	–	–	–	–	–	–	–
	59	132.3	132.3	–	–	99.2	99.2	–	–	–	–	–	–
	65	132.3	132.3	86.0	86.0	99.2	99.2	–	–	–	–	–	–
	72	132.3	132.3	83.8	83.8	94.8	94.8	–	–	57.3	57.3	–	–
	79	132.3	132.3	81.6	81.6	92.6	92.6	–	–	57.3	57.3	–	–
	85	132.3	132.3	79.4	79.4	90.4	90.4	44.1	44.1	55.1	55.1	–	–
	92	132.3	132.3	77.2	77.2	88.2	88.2	44.1	44.1	52.9	52.9	–	–
	98	132.3	132.3	75.0	75.0	86.0	86.0	41.9	41.9	52.9	52.9	–	–
	111	114.6	132.3	72.8	72.8	77.2	77.2	39.7	39.7	48.5	48.5	26.5	26.5
	124	94.8	132.3	68.3	68.3	70.5	70.5	37.5	37.5	46.3	46.3	26.5	26.5
	138	79.4	125.7	66.1	66.1	66.1	66.1	35.3	35.3	44.1	44.1	24.3	24.3
	151	66.1	116.8	63.9	63.9	61.7	61.7	35.3	35.3	41.9	41.9	22.0	22.0
	164	55.1	110.2	59.5	61.7	57.3	57.3	33.1	33.1	39.7	39.7	22.0	22.0
	177	46.3	103.6	50.7	59.5	50.7	52.9	30.9	30.9	35.3	35.3	19.8	19.8
SSL/LSL	190	39.7	97.0	41.9	57.3	44.1	48.5	30.9	30.9	33.1	33.1	19.8	19.8
+LF	203	33.1	90.4	35.3	55.1	37.5	46.3	28.7	28.7	30.9	30.9	17.6	17.6
	216	26.5	86.0	28.7	55.1	30.9	44.1	28.7	28.7	28.7	28.7	17.6	17.6
	230	22.0	81.6	24.3	52.9	24.3	41.9	26.5	26.5	26.5	26.5	17.6	17.6
	243	17.6	79.4	19.8	50.7	19.8	39.7	24.3	26.5	24.3	26.5	15.4	15.4
	256	13.2	75.0	15.4	50.7	17.6	37.5	19.8	26.5	19.8	24.3	15.4	15.4
	269	8.8	72.8	11.0	50.7	13.2	35.3	15.4	24.3	15.4	22.0	15.4	15.4
	282	6.6	68.3	6.6	48.5	8.8	35.3	13.2	24.3	13.2	22.0	15.4	15.4
	295	4.4	66.1	–	–	6.6	33.1	8.8	24.3	8.8	19.8	13.2	13.2
	308	–	63.9	–	–	4.4	30.9	6.6	24.3	6.6	19.8	11.0	13.2
	321	–	59.5	–	–	–	30.9	4.4	24.3	4.4	19.8	6.6	13.2
	335	–	55.1	–	–	–	28.7	–	–	–	17.6	4.4	13.2
	348	–	–	–	–	–	28.7	–	–	–	17.6	–	13.2
	361	–	–	–	–	–	28.7	–	–	–	17.6	–	–
	374	–	–	–	–	–	–	–	–	–	15.4	–	–
	387	–	–	–	–	–	–	–	–	–	15.4	–	–
	400	–	–	–	–	–	–	–	–	–	13.2	–	–

Remarks

[1)] with 132,000 lb central ballast

Superlift mast 98.4 ft

Lifting capacities fixed fly jib with Superlift

Main boom: 374.0 ft

397,000 lb[1)] **27.6 ft** **SL-Radius 49.2 ft** **360°** **DIN/ISO**

		Fly jib											
		39.4 ft				78.7 ft				118.1 ft			
		10°		30°		10°		30°		10°		30°	
Radius		0	496.0	0	275.6	0	385.8	0	165.3	0	275.6	0	165.3
	ft	1,000 lb											
	52	132.3	132.3	–	–	–	–	–	–	–	–	–	–
	59	132.3	132.3	–	–	–	–	–	–	–	–	–	–
	65	132.3	132.3	88.2	88.2	97.0	97.0	–	–	–	–	–	–
	72	132.3	132.3	86.0	86.0	92.6	92.6	–	–	57.3	57.3	–	–
	79	132.3	132.3	83.8	83.8	90.4	90.4	–	–	57.3	57.3	–	–
	85	132.3	132.3	81.6	81.6	88.2	88.2	–	–	55.1	55.1	–	–
	92	132.3	132.3	79.4	79.4	86.0	86.0	44.1	44.1	52.9	52.9	–	–
	98	132.3	132.3	77.2	77.2	83.8	83.8	41.9	41.9	52.9	52.9	–	–
	111	112.4	132.3	75.0	75.0	81.6	81.6	39.7	39.7	48.5	48.5	26.5	26.5
	124	92.6	132.3	70.5	70.5	75.0	75.0	37.5	37.5	46.3	46.3	26.5	26.5
	138	77.2	132.3	68.3	68.3	70.5	70.5	37.5	37.5	44.1	44.1	24.3	24.3
	151	63.9	125.7	66.1	66.1	63.9	63.9	35.3	35.3	41.9	41.9	22.0	22.0
	164	52.9	116.8	55.1	63.9	57.3	59.5	33.1	33.1	39.7	39.7	22.0	22.0
	177	41.9	110.2	46.3	61.7	46.3	57.3	33.1	33.1	37.5	37.5	19.8	19.8
	190	35.3	103.6	37.5	59.5	39.7	52.9	30.9	30.9	35.3	35.3	19.8	19.8
SSL/LSL +LF	203	28.7	99.2	30.9	57.3	33.1	50.7	30.9	30.9	33.1	33.1	19.8	19.8
	216	22.0	92.6	24.3	55.1	26.5	46.3	28.7	28.7	28.7	30.9	17.6	17.6
	230	17.6	88.2	19.8	55.1	22.0	44.1	26.5	28.7	24.3	28.7	17.6	17.6
	243	13.2	83.8	15.4	52.9	17.6	41.9	22.0	26.5	19.8	26.5	17.6	17.6
	256	8.8	81.6	11.0	52.9	13.2	39.7	15.4	26.5	15.4	26.5	15.4	15.4
	269	4.4	77.2	6.6	50.7	8.8	37.5	13.2	26.5	11.0	24.3	15.4	15.4
	282	–	75.0	4.4	50.7	4.4	37.5	8.8	24.3	8.8	24.3	13.2	15.4
	295	–	72.8	–	48.5	–	35.3	4.4	24.3	4.4	22.0	11.0	15.4
	308	–	68.3	–	44.1	–	33.1	–	24.3	–	22.0	6.6	13.2
	321	–	66.1	–	–	–	33.1	–	24.3	–	19.8	4.4	13.2
	335	–	57.3	–	–	–	30.9	–	22.0	–	19.8	–	13.2
	348	–	46.3	–	–	–	30.9	–	19.8	–	17.6	–	13.2
	361	–	33.1	–	–	–	28.7	–	–	–	17.6	–	13.2
	374	–	–	–	–	–	28.7	–	–	–	17.6	–	13.2
	387	–	–	–	–	–	28.7	–	–	–	15.4	–	13.2
	400	–	–	–	–	–	26.5	–	–	–	15.4	–	–
	414	–	–	–	–	–	–	–	–	–	15.4	–	–
	427	–	–	–	–	–	–	–	–	–	15.4	–	–
	440	–	–	–	–	–	–	–	–	–	15.4	–	–

Remarks

[1)] with 132,000 lb central ballast

Superlift mast 98.4 ft

Lifting capacities fixed fly jib with Superlift

Main boom: 413.4 ft

397,000 lb[1)] 27.6 ft SL-Radius 49.2 ft 360° DIN/ISO

		Fly jib											
		39.4 ft				78.7 ft				118.1 ft			
		10°		30°		10°		30°		10°		30°	
Radius		0	275.6	0	275.6	0	275.6	0	165.3	0	275.6	0	165.3
	ft	1,000 lb											
	59	101.4	101.4	–	–	–	–	–	–	–	–	–	–
	65	101.4	101.4	–	–	88.2	88.2	–	–	–	–	–	–
	72	101.4	101.4	86.0	86.0	88.2	88.2	–	–	–	–	–	–
	79	101.4	101.4	83.8	83.8	86.0	86.0	–	–	52.9	52.9	–	–
	85	101.4	101.4	81.6	81.6	83.8	83.8	–	–	52.9	52.9	–	–
	92	101.4	101.4	79.4	79.4	81.6	81.6	44.1	44.1	50.7	50.7	–	–
	98	101.4	101.4	79.4	79.4	79.4	79.4	41.9	41.9	50.7	50.7	–	–
	111	101.4	101.4	75.0	75.0	75.0	75.0	39.7	39.7	48.5	48.5	–	–
	124	90.4	101.4	72.8	72.8	72.8	72.8	39.7	39.7	46.3	46.3	26.5	26.5
	138	75.0	99.2	70.5	70.5	68.3	68.3	37.5	37.5	44.1	44.1	24.3	24.3
	151	61.7	94.8	66.1	68.3	66.1	66.1	35.3	35.3	41.9	41.9	24.3	24.3
	164	50.7	88.2	55.1	63.9	55.1	63.9	35.3	35.3	39.7	39.7	22.0	22.0
	177	39.7	83.8	44.1	63.9	44.1	59.5	33.1	33.1	37.5	37.5	22.0	22.0
	190	33.1	79.4	35.3	61.7	37.5	55.1	30.9	30.9	37.5	37.5	19.8	19.8
SSL/LSL	203	26.5	75.0	28.7	59.5	30.9	52.9	30.9	30.9	33.1	35.3	19.8	19.8
+LF	216	19.8	68.3	22.0	57.3	24.3	50.7	28.7	28.7	26.5	33.1	17.6	17.6
	230	15.4	61.7	17.6	57.3	17.6	48.5	24.3	28.7	22.0	30.9	17.6	17.6
	243	11.0	55.1	13.2	55.1	13.2	44.1	19.8	28.7	17.6	28.7	17.6	17.6
	256	6.6	46.3	8.8	52.9	8.8	41.9	13.2	26.5	13.2	26.5	15.4	15.4
	269	–	37.5	4.4	48.5	6.6	41.9	11.0	26.5	8.8	26.5	15.4	15.4
	282	–	28.7	–	35.3	–	39.7	6.6	26.5	4.4	24.3	11.0	15.4
	295	–	15.4	–	22.0	–	37.5	–	24.3	–	24.3	8.8	15.4
	308	–	–	–	4.4	–	33.1	–	24.3	–	22.0	4.4	15.4
	321	–	–	–	–	–	26.5	–	22.0	–	22.0	–	13.2
	335	–	–	–	–	–	19.8	–	17.6	–	19.8	–	13.2
	348	–	–	–	–	–	13.2	–	11.0	–	19.8	–	13.2
	361	–	–	–	–	–	4.4	–	–	–	19.8	–	13.2
	374	–	–	–	–	–	–	–	–	–	17.6	–	13.2
	387	–	–	–	–	–	–	–	–	–	13.2	–	11.0
	400	–	–	–	–	–	–	–	–	–	8.8	–	8.8
	414	–	–	–	–	–	–	–	–	–	4.4	–	4.4

Main boom: 452.8 ft

		0	165.3	0	165.3	0	165.3	0	165.3	0	165.3	0	165.3
	ft	1,000 lb											
	59	101.4	101.4	–	–	–	–	–	–	–	–	–	–
	65	101.4	101.4	–	–	–	–	–	–	–	–	–	–
	72	101.4	101.4	86.0	86.0	75.0	75.0	–	–	–	–	–	–
	79	101.4	101.4	83.8	83.8	75.0	75.0	–	–	48.5	48.5	–	–
	85	97.0	97.0	83.8	83.8	72.8	72.8	–	–	48.5	48.5	–	–
	92	94.8	94.8	81.6	81.6	72.8	72.8	–	–	46.3	46.3	–	–
	98	90.4	90.4	79.4	79.4	70.5	70.5	41.9	41.9	46.3	46.3	–	–
	111	83.8	83.8	77.2	77.2	66.1	66.1	41.9	41.9	44.1	44.1	–	–
	124	75.0	75.0	72.8	72.8	61.7	61.7	39.7	39.7	41.9	41.9	26.5	26.5
SSL/LSL	138	70.5	70.5	70.5	70.5	57.3	57.3	37.5	37.5	39.7	39.7	24.3	24.3
+LF	151	57.3	63.9	61.7	68.3	52.9	52.9	35.3	35.3	39.7	39.7	24.3	24.3
	164	46.3	57.3	50.7	66.1	50.7	50.7	35.3	35.3	39.7	39.7	22.0	22.0
	177	37.5	50.7	41.9	63.9	41.9	46.3	33.1	33.1	39.7	39.7	22.0	22.0
	190	28.7	44.1	33.1	57.3	33.1	41.9	33.1	33.1	35.3	37.5	19.8	19.8
	203	22.0	35.3	26.5	50.7	26.5	37.5	30.9	30.9	28.7	37.5	19.8	19.8
	216	15.4	28.7	19.8	41.9	19.8	33.1	26.5	28.7	22.0	35.3	17.6	17.6
	230	11.0	22.0	13.2	33.1	15.4	28.7	19.8	24.3	17.6	33.1	17.6	17.6
	243	6.6	13.2	8.8	22.0	11.0	24.3	15.4	17.6	13.2	28.7	15.4	15.4
	256	–	6.6	4.4	11.0	6.6	17.6	11.0	13.2	8.8	24.3	13.2	13.2
	269	–	–	–	–	–	11.0	6.6	8.8	4.4	19.8	8.8	8.8
	282	–	–	–	–	–	–	–	–	–	15.4	4.4	4.4
	295	–	–	–	–	–	–	–	–	–	8.8	–	–

Working ranges fixed fly jib with SL, 30°

SSL + LF, SSL/LSL + LF

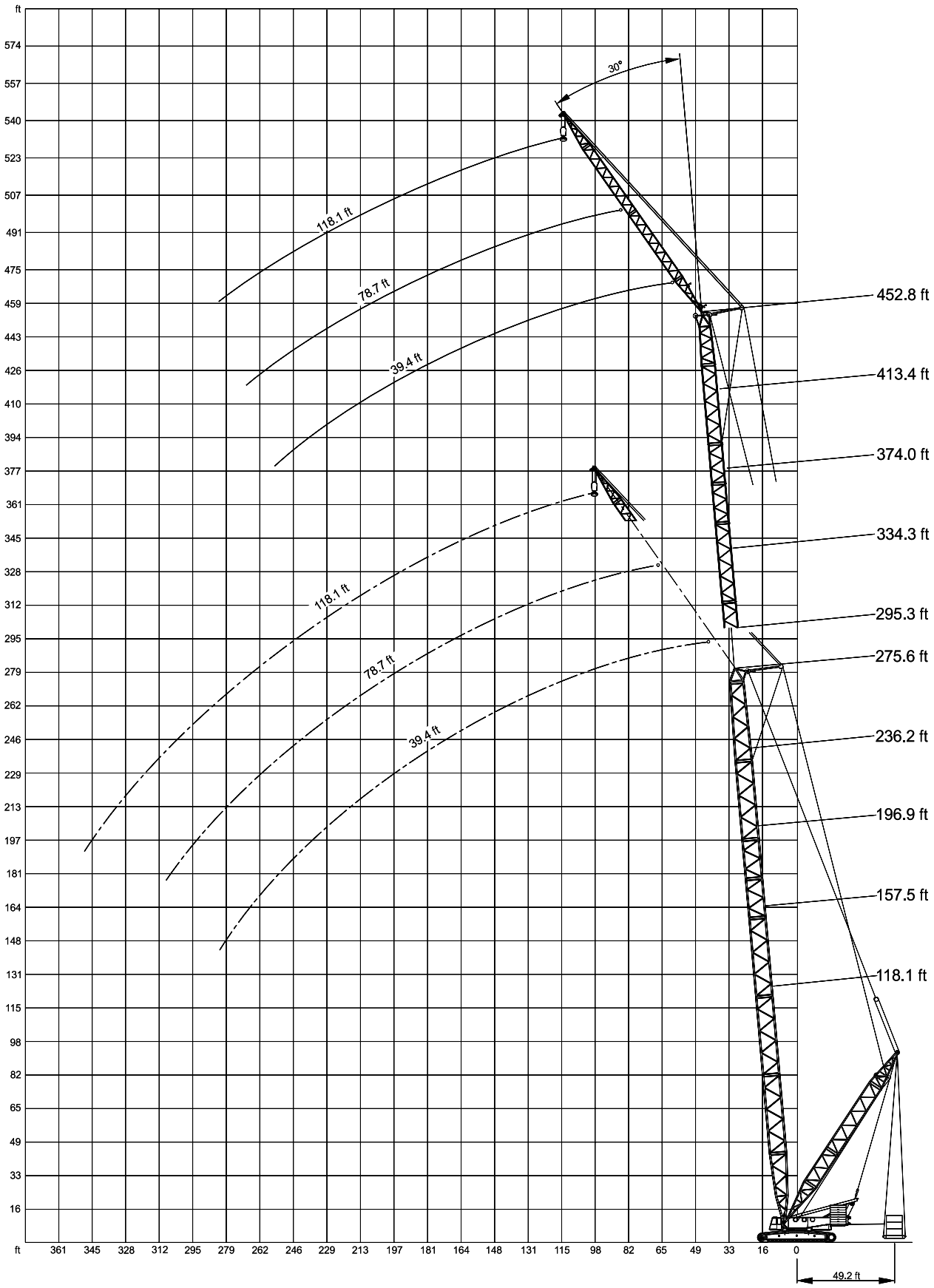

Working ranges luffing fly jib, main boom 85°

SW

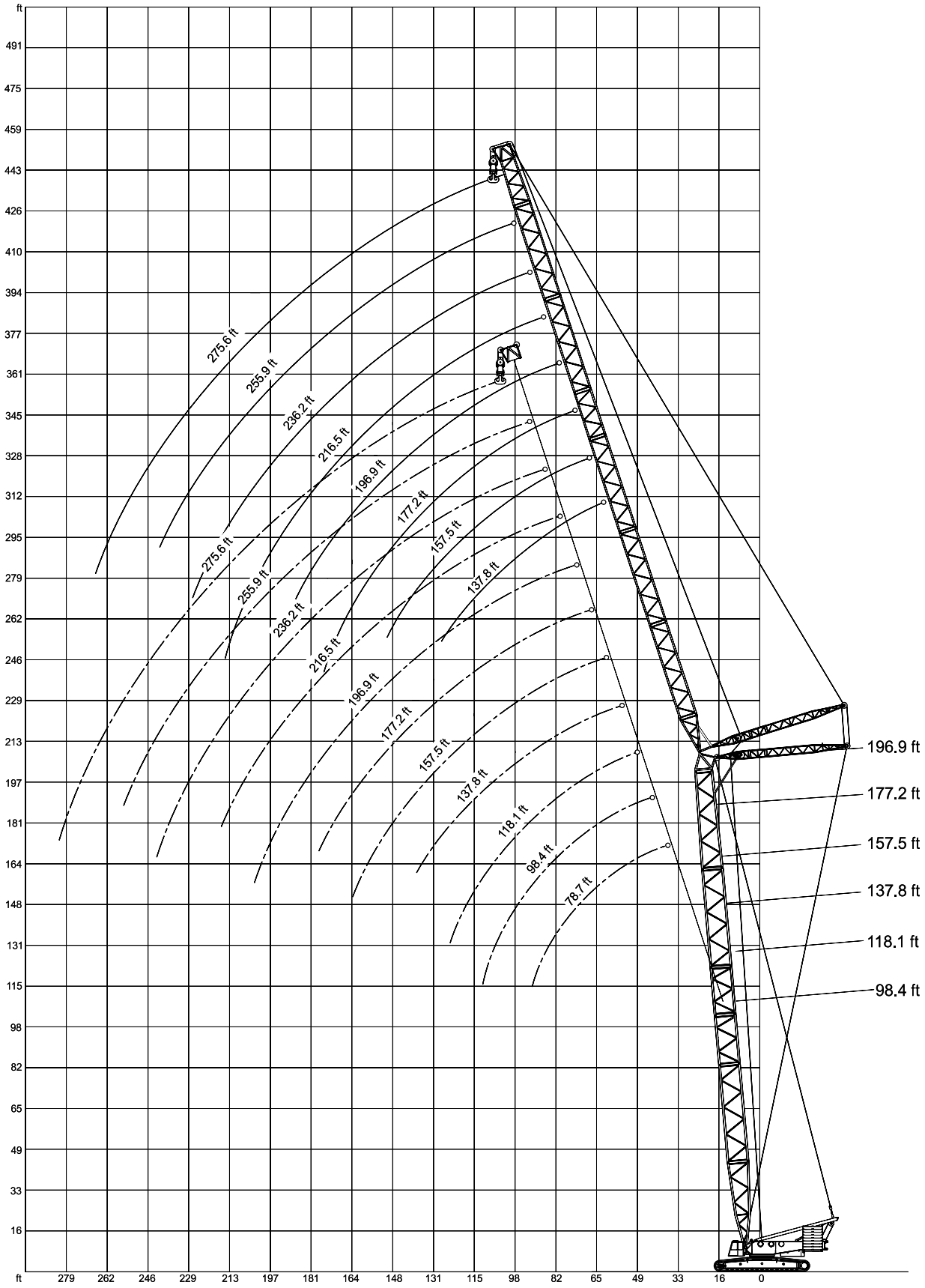

Lifting capacities luffing fly jib, main boom 85°

Main boom: 98.4 ft

397,000 lb[1)] **27.6 ft** **360°** **DIN/ISO**

Radius		Fly jib										
		78.7 ft	98.4 ft	118.1 ft	137.8 ft	157.5 ft	177.2 ft	196.9 ft	216.5 ft	236.2 ft	255.9 ft	275.6 ft
	ft	1,000 lb										
	46	456.4	–	–	–	–	–	–	–	–	–	–
	52	377.0	374.8	–	–	–	–	–	–	–	–	–
	59	319.7	317.5	315.3	–	–	–	–	–	–	–	–
	65	275.6	273.4	273.4	271.2	–	–	–	–	–	–	–
	72	242.5	240.3	240.3	238.1	235.9	–	–	–	–	–	–
	79	216.1	213.8	213.8	211.6	209.4	207.2	–	–	–	–	–
	85	194.0	191.8	191.8	189.6	187.4	185.2	183.0	–	–	–	–
	92	176.4	174.2	174.2	172.0	169.8	167.6	165.3	163.1	–	–	–
	98	–	158.7	158.7	156.5	154.3	152.1	149.9	149.9	147.7	–	–
	111	–	134.5	134.5	132.3	130.1	127.9	125.7	125.7	123.5	121.3	119.0
SW	124	–	–	114.6	112.4	112.4	110.2	108.0	105.8	103.6	103.6	101.4
	138	–	–	–	99.2	97.0	94.8	92.6	92.6	90.4	88.2	86.0
	151	–	–	–	–	86.0	83.8	81.6	79.4	77.2	77.2	75.0
	164	–	–	–	–	75.0	72.8	72.8	70.5	68.3	68.3	66.1
	177	–	–	–	–	–	66.1	63.9	61.7	59.5	59.5	57.3
	190	–	–	–	–	–	–	57.3	55.1	52.9	52.9	50.7
	203	–	–	–	–	–	–	50.7	48.5	46.3	46.3	44.1
	216	–	–	–	–	–	–	–	44.1	41.9	41.9	39.7
	230	–	–	–	–	–	–	–	–	37.5	35.3	33.1
	243	–	–	–	–	–	–	–	–	33.1	33.1	28.7
	256	–	–	–	–	–	–	–	–	–	28.7	26.5
	269	–	–	–	–	–	–	–	–	–	–	22.0
	282	–	–	–	–	–	–	–	–	–	–	19.8

Main boom: 118.1 ft

397,000 lb[1)] **27.6 ft** **360°** **DIN/ISO**

Radius		Fly jib										
		78.7 ft	98.4 ft	118.1 ft	137.8 ft	157.5 ft	177.2 ft	196.9 ft	216.5 ft	236.2 ft	255.9 ft	275.6 ft
	ft	1,000 lb										
	52	372.6	–	–	–	–	–	–	–	–	–	–
	59	317.5	315.3	313.1	–	–	–	–	–	–	–	–
	65	273.4	271.2	271.2	269.0	–	–	–	–	–	–	–
	72	240.3	238.1	238.1	235.9	233.7	–	–	–	–	–	–
	79	213.8	211.6	211.6	209.4	207.2	205.0	–	–	–	–	–
	85	191.8	191.8	189.6	187.4	185.2	183.0	180.8	–	–	–	–
	92	174.2	174.2	172.0	169.8	167.6	165.3	163.1	163.1	–	–	–
	98	–	158.7	156.5	154.3	152.1	149.9	149.9	147.7	145.5	–	–
	111	–	134.5	132.3	130.1	127.9	125.7	125.7	123.5	121.3	121.3	119.0
	124	–	–	114.6	112.4	110.2	108.0	105.8	105.8	103.6	101.4	99.2
SW	138	–	–	–	97.0	97.0	92.6	92.6	90.4	88.2	88.2	86.0
	151	–	–	–	86.0	83.8	81.6	79.4	79.4	77.2	75.0	75.0
	164	–	–	–	–	75.0	72.8	70.5	68.3	66.1	66.1	63.9
	177	–	–	–	–	–	63.9	61.7	61.7	59.5	57.3	57.3
	190	–	–	–	–	–	57.3	55.1	55.1	52.9	50.7	48.5
	203	–	–	–	–	–	–	50.7	48.5	46.3	46.3	44.1
	216	–	–	–	–	–	–	–	44.1	41.9	39.7	37.5
	230	–	–	–	–	–	–	–	–	35.3	35.3	33.1
	243	–	–	–	–	–	–	–	–	33.1	30.9	28.7
	256	–	–	–	–	–	–	–	–	–	28.7	24.3
	269	–	–	–	–	–	–	–	–	–	–	22.0
	282	–	–	–	–	–	–	–	–	–	–	19.8

Remarks [1)] with 132,000 lb central ballast

Lifting capacities luffing fly jib, main boom 85°

Main boom: 137.8 ft

397,000 lb[1)] **27.6 ft** **360°** **DIN/ISO**

Radius		Fly jib										
		78.7 ft	98.4 ft	118.1 ft	137.8 ft	157.5 ft	177.2 ft	196.9 ft	216.5 ft	236.2 ft	255.9 ft	275.6 ft
	ft	1,000 lb										
	52	370.4	–	–	–	–	–	–	–	–	–	–
	59	313.1	313.1	–	–	–	–	–	–	–	–	–
	65	271.2	269.0	269.0	–	–	–	–	–	–	–	–
	72	238.1	235.9	235.9	233.7	–	–	–	–	–	–	–
	79	211.6	211.6	209.4	207.2	205.0	202.8	–	–	–	–	–
	85	189.6	189.6	187.4	185.2	183.0	180.8	180.8	–	–	–	–
	92	172.0	172.0	169.8	167.6	165.3	163.1	163.1	160.9	–	–	–
	98	–	156.5	154.3	152.1	152.1	147.7	147.7	145.5	143.3	–	–
	111	–	132.3	130.1	127.9	127.9	125.7	123.5	121.3	119.0	119.0	116.8
	124	–	–	112.4	110.2	108.0	105.8	105.8	103.6	101.4	101.4	99.2
SW	138	–	–	–	97.0	94.8	92.6	90.4	88.2	86.0	86.0	83.8
	151	–	–	–	83.8	83.8	81.6	79.4	77.2	75.0	75.0	72.8
	164	–	–	–	–	72.8	70.5	70.5	68.3	66.1	66.1	63.9
	177	–	–	–	–	–	63.9	61.7	59.5	57.3	57.3	55.1
	190	–	–	–	–	–	57.3	55.1	52.9	50.7	50.7	48.5
	203	–	–	–	–	–	–	48.5	48.5	44.1	44.1	41.9
	216	–	–	–	–	–	–	–	41.9	39.7	39.7	37.5
	230	–	–	–	–	–	–	–	37.5	35.3	35.3	30.9
	243	–	–	–	–	–	–	–	–	30.9	30.9	28.7
	256	–	–	–	–	–	–	–	–	–	26.5	24.3
	269	–	–	–	–	–	–	–	–	–	–	22.0
	282	–	–	–	–	–	–	–	–	–	–	17.6

Main boom: 157.5 ft

397,000 lb[1)] **27.6 ft** **360°** **DIN/ISO**

Radius		Fly jib										
		78.7 ft	98.4 ft	118.1 ft	137.8 ft	157.5 ft	177.2 ft	196.9 ft	216.5 ft	236.2 ft	255.9 ft	275.6 ft
	ft	1,000 lb										
	52	368.2	–	–	–	–	–	–	–	–	–	–
	59	310.9	308.6	–	–	–	–	–	–	–	–	–
	65	269.0	266.8	266.8	–	–	–	–	–	–	–	–
	72	235.9	233.7	233.7	231.5	–	–	–	–	–	–	–
	79	209.4	209.4	207.2	205.0	202.8	–	–	–	–	–	–
	85	189.6	187.4	185.2	183.0	180.8	178.6	–	–	–	–	–
	92	169.8	169.8	167.6	165.3	163.1	160.9	160.9	–	–	–	–
	98	156.5	154.3	154.3	149.9	149.9	147.7	145.5	143.3	–	–	–
	111	–	130.1	130.1	127.9	125.7	123.5	121.3	119.0	116.8	116.8	114.6
	124	–	–	112.4	108.0	108.0	105.8	103.6	101.4	99.2	99.2	97.0
SW	138	–	–	–	94.8	92.6	90.4	90.4	88.2	86.0	86.0	83.8
	151	–	–	–	83.8	81.6	79.4	77.2	77.2	75.0	72.8	70.5
	164	–	–	–	–	72.8	70.5	68.3	66.1	63.9	63.9	61.7
	177	–	–	–	–	–	61.7	61.7	59.5	57.3	55.1	52.9
	190	–	–	–	–	–	55.1	55.1	52.9	50.7	48.5	46.3
	203	–	–	–	–	–	–	48.5	46.3	44.1	44.1	39.7
	216	–	–	–	–	–	–	–	41.9	39.7	37.5	35.3
	230	–	–	–	–	–	–	–	37.5	33.1	33.1	30.9
	243	–	–	–	–	–	–	–	–	30.9	28.7	26.5
	256	–	–	–	–	–	–	–	–	–	26.5	24.3
	269	–	–	–	–	–	–	–	–	–	22.0	19.8
	282	–	–	–	–	–	–	–	–	–	–	17.6

Remarks [1)] with 132,000 lb central ballast

Lifting capacities luffing fly jib, main boom 85°

Main boom: 177.2 ft

397,000 lb[1)] **27.6 ft** **360°** **DIN/ISO**

Radius		Fly jib									
		98.4 ft	118.1 ft	137.8 ft	157.5 ft	177.2 ft	196.9 ft	216.5 ft	236.2 ft	255.9 ft	275.6 ft
	ft	1,000 lb									
	59	306.4	–	–	–	–	–	–	–	–	–
	65	264.6	262.4	–	–	–	–	–	–	–	–
	72	231.5	231.5	227.1	–	–	–	–	–	–	–
	79	207.2	205.0	202.8	200.6	–	–	–	–	–	–
	85	185.2	183.0	180.8	180.8	176.4	–	–	–	–	–
	92	167.6	165.3	163.1	163.1	158.7	158.7	–	–	–	–
	98	152.1	152.1	149.9	147.7	145.5	143.3	141.1	–	–	–
	111	130.1	127.9	125.7	123.5	121.3	119.0	119.0	116.8	114.6	–
	124	–	110.2	108.0	105.8	103.6	101.4	101.4	99.2	97.0	94.8
SW	138	–	97.0	92.6	92.6	90.4	88.2	86.0	83.8	83.8	81.6
	151	–	–	81.6	81.6	77.2	77.2	75.0	72.8	72.8	70.5
	164	–	–	–	70.5	68.3	68.3	66.1	63.9	63.9	61.7
	177	–	–	–	–	61.7	59.5	57.3	55.1	55.1	52.9
	190	–	–	–	–	55.1	52.9	50.7	48.5	48.5	46.3
	203	–	–	–	–	–	46.3	46.3	41.9	41.9	39.7
	216	–	–	–	–	–	–	39.7	37.5	37.5	35.3
	230	–	–	–	–	–	–	35.3	33.1	33.1	28.7
	243	–	–	–	–	–	–	–	28.7	28.7	26.5
	256	–	–	–	–	–	–	–	–	24.3	22.0
	269	–	–	–	–	–	–	–	–	22.0	19.8
	282	–	–	–	–	–	–	–	–	–	15.4

Main boom: 196.9 ft

397,000 lb[1)] **27.6 ft** **360°** **DIN/ISO**

Radius		Fly jib								
		118.1 ft	137.8 ft	157.5 ft	177.2 ft	196.9 ft	216.5 ft	236.2 ft	255.9 ft	275.6 ft
	ft	1,000 lb								
	65	260.1	–	–	–	–	–	–	–	–
	72	227.1	224.9	–	–	–	–	–	–	–
	79	202.8	200.6	198.4	–	–	–	–	–	–
	85	180.8	178.6	176.4	174.2	–	–	–	–	–
	92	165.3	160.9	160.9	156.5	156.5	–	–	–	–
	98	149.9	147.7	145.5	143.3	141.1	138.9	–	–	–
	111	125.7	123.5	121.3	119.0	119.0	116.8	114.6	110.2	–
	124	108.0	105.8	103.6	101.4	101.4	99.2	97.0	94.8	94.8
	138	94.8	92.6	90.4	88.2	86.0	86.0	81.6	81.6	79.4
SW	151	–	81.6	79.4	77.2	75.0	72.8	70.5	70.5	68.3
	164	–	–	70.5	68.3	66.1	63.9	61.7	61.7	59.5
	177	–	–	61.7	59.5	57.3	57.3	55.1	52.9	50.7
	190	–	–	–	52.9	52.9	50.7	46.3	46.3	44.1
	203	–	–	–	–	46.3	44.1	41.9	39.7	37.5
	216	–	–	–	–	–	39.7	35.3	35.3	33.1
	230	–	–	–	–	–	35.3	30.9	30.9	28.7
	243	–	–	–	–	–	–	28.7	26.5	24.3
	256	–	–	–	–	–	–	–	24.3	22.0
	269	–	–	–	–	–	–	–	19.8	17.6
	282	–	–	–	–	–	–	–	–	15.4

Remarks [1)] with 132,000 lb central ballast

Working ranges luffing fly jib with SL, main boom 85°

SWSL

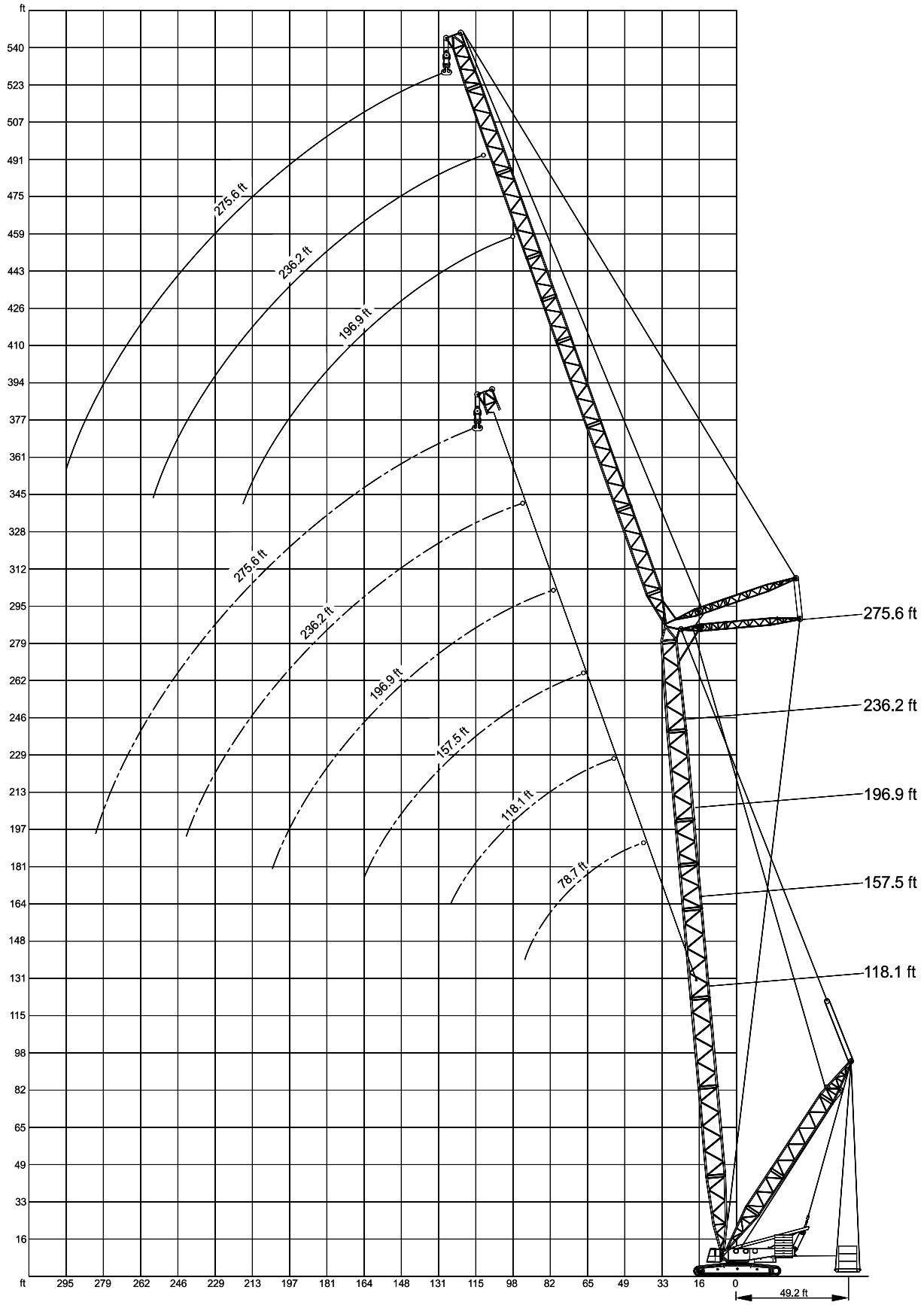

Lifting capacities luffing fly jib with SL, main boom 85°

Main boom: 118.1 ft · SL-Radius 49.2 ft

353,000 lb — **27.6 ft** — **360°**

	Fly jib	Radius lb	0	110.2	220.5	330.7	440.9	551.2	496.0
		ft	1,000 lb						
SWSL	78.7 ft	52	337.3	496.6	599.7	661.4	661.4	–	661.4
		59	286.6	399.0	509.3	621.7	661.4	–	661.4
		65	246.9	343.9	443.1	540.1	637.1	661.4	661.4
		72	216.1	304.2	390.2	476.2	564.4	606.3	601.9
		79	191.8	271.2	348.3	427.7	504.9	544.5	544.5
		85	174.2	244.7	315.3	385.8	456.4	471.8	471.8
		92	156.5	220.5	286.6	350.5	401.2	–	401.2

	Fly jib	Radius lb	0	110.2	220.5	330.7	440.9	551.2	606.3
		ft	1,000 lb						
SWSL	118.1 ft	59	282.2	394.6	507.1	566.6	566.6	–	566.6
		65	244.7	341.7	438.7	537.9	566.6	–	566.6
		72	213.8	302.0	388.0	474.0	557.8	557.8	557.8
		79	189.6	269.0	346.1	423.3	502.7	526.9	526.9
		85	169.8	242.5	313.1	383.6	454.2	498.2	498.2
		92	154.3	218.3	284.4	348.3	414.5	460.8	460.8
		98	141.1	200.6	260.1	319.7	379.2	414.5	414.5
		111	119.0	169.8	222.7	273.4	326.3	337.3	337.3
		124	101.4	147.7	194.0	238.1	273.4	–	273.4

	Fly jib	Radius lb	0	110.2	220.5	330.7	440.9	551.2	496.0
		ft	1,000 lb						
SWSL	157.5 ft	72	209.4	297.6	383.6	412.3	–	–	412.3
		79	185.2	264.6	341.7	412.3	412.3	–	412.3
		85	167.6	238.1	308.6	379.2	412.3	–	412.3
		92	149.9	216.1	280.0	343.9	396.8	–	396.8
		98	136.7	196.2	255.7	315.3	377.0	379.2	379.2
		111	114.6	167.6	218.3	271.2	321.9	343.9	343.9
		124	97.0	143.3	189.6	235.9	280.0	302.0	302.0
		138	83.8	125.7	167.6	207.2	249.1	257.9	257.9
		151	75.0	110.2	147.7	185.5	220.5	–	220.5
		164	66.1	99.2	132.3	167.6	185.2	–	185.2

	Fly jib	Radius lb	0	110.2	220.5	330.7	440.9	496.0
		ft	1,000 lb					
SWSL	196.9 ft	85	163.1	233.7	293.2	295.4	–	295.4
		92	145.5	211.6	275.6	295.4	–	295.4
		98	132.3	191.8	251.3	295.4	295.4	295.4
		111	110.2	163.1	213.8	266.8	282.2	282.2
		124	94.8	138.9	185.2	231.5	262.4	262.4
		138	81.6	121.3	163.1	202.8	242.5	242.5
		151	70.5	108.0	143.3	180.8	218.3	220.5
		164	61.7	94.8	130.1	163.1	196.2	198.4
		177	55.1	86.0	116.8	147.7	174.2	174.2
		190	48.5	77.2	105.8	134.5	152.1	152.1
		203	44.1	70.5	97.0	123.5	130.1	130.1

Remarks

Superlift mast 98.4 ft

353,000 lb — **27.6 ft** — **360°**

	Fly jib	Radius lb	0	110.2	220.5	330.7	440.9	496.0
		ft	1,000 lb					
SWSL	236.2 ft	98	127.9	189.6	207.2	–	–	211.6
		111	108.0	158.7	207.2	211.6	–	211.6
		124	90.4	136.7	180.8	207.2	–	207.2
		138	77.2	119.0	158.7	200.6	200.6	200.6
		151	66.1	103.6	141.1	176.4	191.8	191.8
		164	57.3	92.6	125.7	158.7	183.0	183.0
		177	50.7	81.6	112.4	143.3	174.2	174.2
		190	44.1	72.8	101.4	130.1	158.7	160.9
		203	37.5	66.1	92.6	119.0	141.1	141.1
		216	33.1	59.5	83.8	110.2	125.7	125.7
		230	28.7	55.1	77.2	101.4	110.2	110.2
		243	26.5	48.5	70.5	94.8	94.8	94.8

	Fly jib	Radius lb	0	110.2	220.5	330.7	440.9	496.0
		ft	1,000 lb					
SWSL	275.6 ft	111	103.6	149.9	149.9	–	–	152.1
		124	88.2	132.3	149.9	152.1	–	152.1
		138	75.0	114.6	149.9	149.9	–	149.9
		151	63.9	101.4	138.9	149.9	–	149.9
		164	55.1	88.2	123.5	147.7	147.7	147.7
		177	48.5	79.4	110.2	141.1	145.5	145.5
		190	41.9	70.5	99.2	127.9	143.3	143.3
		203	35.3	63.9	90.4	116.8	138.9	138.9
		216	30.9	57.3	81.6	105.8	130.1	130.1
		230	26.5	50.7	75.0	99.2	116.8	116.8
		243	22.0	46.3	68.3	90.4	105.8	105.8
		256	19.8	41.9	63.9	83.8	92.6	92.6
		269	15.4	37.5	57.3	77.2	81.6	81.6
		282	13.2	33.1	52.9	70.5	70.5	70.5

Lifting capacities luffing fly jib with SL, main boom 85°

Main boom: 157.5 ft · SL-Radius 49.2 ft

353,000 lb 27.6 ft 360°

SL

	Fly jib	Radius lb	0	110.2	220.5	330.7	440.9	551.2	606.3
		ft			1,000 lb				
SWSL	78.7 ft	52	332.9	463.9	593.0	652.6	652.6	–	652.6
		59	280.0	392.4	504.9	617.3	652.6	–	652.6
		65	242.5	339.5	438.7	535.7	615.1	615.1	615.1
		72	213.8	299.8	385.8	474.0	560.0	579.8	579.8
		79	189.6	266.8	343.9	423.3	500.4	546.7	546.7
		85	169.8	240.3	310.9	381.4	451.9	504.9	504.9
		92	154.3	218.3	282.2	348.3	412.3	432.1	434.3
		98	138.9	198.4	260.1	319.7	359.4	–	363.8

	Fly jib	Radius lb	0	110.2	220.5	330.7	440.9	551.2	496.0
		ft			1,000 lb				
SWSL	118.1 ft	65	240.3	337.3	434.3	480.6	480.6	–	480.6
		72	209.4	297.6	383.6	469.6	480.6	–	480.6
		79	185.2	264.6	341.7	421.1	465.2	–	465.2
		85	167.6	238.1	308.6	379.2	447.5	447.5	447.5
		92	149.9	216.1	280.0	346.1	410.1	427.7	427.7
		98	136.7	196.2	257.9	317.5	377.0	410.1	405.7
		111	114.6	167.6	218.3	271.2	321.9	350.5	348.3
		124	99.2	145.5	189.6	235.9	282.2	284.4	284.4

	Fly jib	Radius lb	0	110.2	220.5	330.7	440.9	551.2	496.0
		ft			1,000 lb				
SWSL	157.5 ft	79	183.0	260.1	337.3	357.1	–	–	357.1
		85	163.1	233.7	304.2	357.1	357.1	–	357.1
		92	147.7	211.6	275.6	341.7	352.7	–	352.7
		98	132.3	194.0	253.5	313.1	346.1	–	346.1
		111	112.4	163.1	216.1	266.8	319.7	328.5	328.5
		124	94.8	141.1	187.4	231.5	277.8	306.4	299.8
		138	81.6	123.5	163.1	205.0	244.7	264.6	264.6
		151	72.8	108.0	145.5	183.0	220.5	227.1	227.1
		164	63.9	97.0	130.1	165.3	191.8	–	191.8

	Fly jib	Radius lb	0	110.2	220.5	330.7	440.9	496.0
		ft			1,000 lb			
SWSL	196.9 ft	92	143.3	207.2	262.4	264.6	–	264.6
		98	130.1	189.6	249.1	264.6	–	264.6
		111	108.0	158.7	211.6	257.9	257.9	257.9
		124	90.4	136.7	183.0	229.3	246.9	246.9
		138	79.4	119.0	160.9	200.6	233.4	233.7
		151	68.3	105.8	141.1	178.6	216.1	216.1
		164	59.5	92.6	127.9	160.9	194.0	200.6
		177	52.9	83.8	114.6	145.5	176.4	178.6
		190	46.3	75.0	103.6	132.3	154.3	154.3
		203	41.9	68.3	94.8	121.3	132.3	132.3

Remarks

Superlift mast 98.4 ft

353,000 lb 27.6 ft 360°

SL

	Fly jib	Radius lb	0	110.2	220.5	330.7	440.9	496.0
		ft			1,000 lb			
SWSL	236.2 ft	111	103.6	156.5	189.6	191.8	–	191.8
		124	88.2	132.3	178.6	189.6	–	189.6
		138	75.0	114.6	156.5	183.0	–	183.0
		151	63.9	101.4	138.9	174.2	176.4	176.4
		164	55.1	90.4	123.5	156.5	169.8	169.8
		177	48.5	79.4	110.2	141.1	163.1	163.1
		190	41.9	70.5	99.2	127.9	156.5	156.5
		203	35.3	63.9	90.4	116.8	143.3	143.3
		216	30.9	57.3	83.8	108.0	127.9	127.9
		230	26.5	52.9	75.0	99.2	112.4	112.4
		243	24.3	48.5	70.5	92.6	97.0	97.0

	Fly jib	Radius lb	0	110.2	220.5	330.7	440.9	496.0
		ft			1,000 lb			
SWSL	275.6 ft	111	101.4	136.7	138.9	–	–	141.1
		124	83.8	130.1	138.9	–	–	141.1
		138	72.8	112.4	138.9	138.9	–	138.9
		151	61.7	99.2	134.5	136.7	–	136.7
		164	52.9	86.0	121.3	134.5	–	134.5
		177	44.1	77.2	108.0	132.3	132.3	132.3
		190	39.7	68.3	97.0	125.7	132.3	132.3
		203	33.1	61.7	88.2	114.6	130.1	130.1
		216	28.7	55.1	79.4	105.8	127.9	127.9
		230	24.3	48.5	72.8	97.0	119.0	119.0
		243	19.8	44.1	66.1	88.2	105.8	105.8
		256	17.6	39.7	61.7	81.6	94.8	94.8
		269	15.4	35.3	57.3	77.2	83.8	83.8
		282	11.0	33.1	52.9	70.5	72.8	72.8

Lifting capacities luffing fly jib with SL, main boom 85°

Main boom: 196.9 ft · SL-Radius 49.2 ft

353,000 lb | **27.6 ft** | **360°**

	Fly jib	Radius lb	0	110.2	220.5	330.7	440.9	496.0
		ft		1,000 lb				
SWSL	118.1 ft	65	233.7	330.7	388.0	392.4	–	392.4
		72	205.0	291.0	379.2	392.4	–	392.4
		79	180.8	260.1	337.3	388.0	388.0	388.0
		85	163.1	233.7	304.2	374.8	377.0	377.0
		92	147.7	211.6	275.6	341.7	363.8	363.8
		98	134.5	194.0	253.5	313.1	352.7	352.7
		111	112.4	163.1	216.1	266.8	319.7	328.5
		124	97.0	141.1	187.4	233.7	277.8	302.0
		138	83.8	123.5	165.3	205.0	240.3	240.3

	Fly jib	Radius lb	0	110.2	220.5	330.7	440.9	551.2	496.0
		ft			1,000 lb				
SWSL	157.5 ft	79	176.4	255.7	293.2	297.6	–	–	297.6
		85	158.7	229.3	293.2	297.6	–	–	297.6
		92	143.3	207.2	273.4	297.6	–	–	297.6
		98	130.1	189.6	249.1	291.0	291.0	–	291.0
		111	108.0	160.9	211.6	264.6	277.8	–	277.8
		124	92.6	138.9	183.0	229.3	262.4	–	262.4
		138	79.4	121.3	160.9	202.8	242.5	249.1	249.1
		151	68.3	105.8	143.3	180.8	216.1	235.9	235.9
		164	61.7	94.8	127.9	163.1	196.2	202.8	202.8
		177	55.1	86.0	116.8	147.7	165.3	–	165.3

	Fly jib	Radius lb	0	110.2	220.5	330.7	440.9	496.0
		ft		1,000 lb				
SWSL	196.9 ft	92	138.9	202.8	222.7	–	–	224.9
		98	125.7	185.2	222.7	224.9	–	224.9
		111	103.6	156.5	207.2	222.7	–	222.7
		124	88.2	134.5	178.6	216.1	216.1	216.1
		138	75.0	116.8	156.5	198.4	209.4	209.4
		151	66.1	101.4	138.9	176.4	200.6	200.6
		164	57.3	90.4	123.5	158.7	189.6	189.6
		177	50.7	81.6	112.4	143.3	174.2	180.8
		190	44.1	72.8	101.4	130.1	158.7	160.9
		203	37.5	66.1	92.6	119.0	138.9	138.9

	Fly jib	Radius lb	0	110.2	220.5	330.7	440.9	496.0
		ft		1,000 lb				
SWSL	236.2 ft	111	99.2	152.1	167.6	–	–	169.8
		124	83.8	130.1	167.6	167.6	–	167.6
		138	70.5	112.4	154.3	163.1	–	163.1
		151	61.7	99.2	134.5	158.7	–	158.7
		164	52.9	86.0	121.3	154.3	154.3	154.3
		177	46.3	77.2	108.0	138.9	149.9	149.9
		190	39.7	68.3	97.0	125.7	145.5	145.5
		203	33.1	61.7	88.2	114.6	138.9	138.9
		216	28.7	55.1	81.6	105.8	130.1	132.3
		230	24.3	50.7	75.0	97.0	116.8	116.8
		243	22.0	44.1	68.3	90.4	101.4	101.4

353,000 lb | **27.6 ft** | **360°**

	Fly jib	Radius lb	0	110.2	220.5	330.7	440.9	496.0
		ft		1,000 lb				
SWSL	275.6 ft	124	81.6	123.5	123.5	–	–	125.7
		138	68.3	110.2	123.5	125.7	–	125.7
		151	59.5	94.8	123.5	123.5	–	123.5
		164	50.7	83.8	116.8	121.3	–	121.3
		177	41.9	75.0	105.8	119.0	–	119.0
		190	35.3	66.1	94.8	116.8	116.8	116.8
		203	30.9	59.5	86.0	112.4	114.6	114.6
		216	26.5	52.9	77.2	103.6	112.4	112.4
		230	22.0	46.3	70.5	94.8	108.0	108.0
		243	17.6	41.9	63.9	88.2	105.8	105.8
		256	15.4	37.5	59.5	81.6	97.0	97.0
		269	13.2	33.1	55.1	75.0	86.0	86.0
		282	11.0	30.9	50.7	70.5	75.0	75.0

Remarks

Superlift mast 98.4 ft

Lifting capacities luffing fly jib with SL, main boom 85°

Main boom: 236.2 ft · SL-Radius 49.2 ft

353,000 lb | **27.6 ft** | **360°**

SL

	Fly jib	Radius lb	0	110.2	220.5	330.7	440.9	496.0
		ft	1,000 lb					
SWSL	157.5 ft	85	154.3	224.9	229.3	–	–	233.7
		92	138.9	202.8	229.3	233.7	–	233.7
		98	125.7	185.2	229.3	231.5	–	231.5
		111	103.6	156.5	207.2	222.7	–	222.7
		124	88.2	134.5	180.8	213.8	–	213.8
		138	77.2	116.8	158.7	198.4	202.8	202.8
		151	66.1	103.6	141.1	176.4	194.0	194.0
		164	57.3	92.6	125.7	158.7	185.2	185.2
		177	50.7	81.6	112.4	145.5	176.4	176.4

	Fly jib	Radius lb	0	110.2	220.5	330.7	440.9	496.0
		ft	1,000 lb					
SWSL	196.9 ft	98	121.3	176.4	178.6	–	–	180.8
		111	101.4	152.1	178.6	178.6	–	178.6
		124	83.8	130.1	172.0	174.2	–	174.2
		138	72.8	112.4	154.3	167.6	–	167.6
		151	61.7	99.2	136.7	160.9	160.9	160.9
		164	55.1	88.2	121.3	154.3	156.5	156.5
		177	46.3	79.4	110.2	141.1	152.1	152.1
		190	41.9	70.5	99.2	127.9	145.5	145.5
		203	35.3	63.9	90.4	116.8	141.1	141.1
		216	30.9	57.3	81.6	108.0	123.5	123.5

Remarks

Superlift mast 98.4 ft

353,000 lb | **27.6 ft** | **360°**

SL

	Fly jib	Radius lb	0	110.2	220.5	330.7	440.9	385.8
		ft	1,000 lb					
SWSL	236.2 ft	111	97.0	134.5	136.7	–	–	138.9
		124	81.6	125.7	136.7	–	–	138.9
		138	68.3	110.2	134.5	134.5	–	134.5
		151	57.3	94.8	130.1	132.3	–	132.3
		164	48.5	83.8	116.8	127.9	–	127.9
		177	41.9	75.0	105.8	123.5	123.5	123.5
		190	35.3	66.1	94.8	119.0	119.0	119.0
		203	30.9	59.5	86.0	112.4	116.8	116.8
		216	26.5	52.9	79.4	103.6	112.4	112.4
		230	22.0	48.5	72.8	94.8	108.0	105.8
		243	19.8	41.9	66.1	88.2	103.6	99.2
		256	15.4	39.7	61.7	81.6	90.4	90.4

	Fly jib	Radius lb	0	110.2	220.5	330.7	440.9	385.8
		ft	1,000 lb					
SWSL	275.6 ft	124	75.0	103.6	103.6	–	–	105.8
		138	63.9	103.6	103.6	–	–	105.8
		151	52.9	92.6	103.6	103.6	–	103.6
		164	46.3	81.6	101.4	101.4	–	101.4
		177	39.7	72.8	99.2	101.4	–	101.4
		190	33.1	63.9	92.6	99.2	–	99.2
		203	28.7	55.1	83.8	97.0	97.0	97.0
		216	24.3	50.7	75.0	94.8	94.8	94.8
		230	19.8	44.1	68.3	92.6	92.6	92.6
		243	15.4	39.7	63.9	86.0	88.2	88.2
		256	13.2	35.3	57.3	79.4	86.0	86.0
		269	11.0	30.9	52.9	72.8	83.8	83.8
		282	8.8	28.7	48.5	68.3	79.4	77.2
		295	–	24.3	44.1	63.9	66.1	66.1

Lifting capacities luffing fly jib with SL, main boom 85°

Main boom: 275.6 ft · SL-Radius 49.2 ft

353,000 lb 27.6 ft 360°

	Fly jib	Radius lb	0	110.2	220.5	330.7	385.8
		ft	1,000 lb				
SWSL	196.9 ft	98	114.6	134.5	136.7	–	141.1
		111	94.8	134.5	136.7	–	141.1
		124	81.6	125.7	134.5	–	136.7
		138	68.3	110.2	130.1	130.1	130.1
		151	59.5	97.0	123.5	125.7	125.7
		164	50.7	86.0	119.0	121.3	121.3
		177	44.1	75.0	105.8	114.6	114.6
		190	37.5	68.3	97.0	110.2	110.2
		203	33.1	61.7	88.2	105.8	105.8
		216	28.7	55.1	79.4	101.4	101.4

	Fly jib	Radius lb	0	110.2	220.5	330.7	385.8
		ft	1,000 lb				
SWSL	236.2 ft	111	88.2	105.8	105.8	–	108.0
		124	72.8	105.8	105.8	–	108.0
		138	61.7	103.6	103.6	–	105.8
		151	52.9	92.6	101.4	103.6	103.6
		164	46.3	81.6	99.2	99.2	99.2
		177	39.7	70.5	94.8	97.0	97.0
		190	33.1	63.9	92.6	92.6	92.6
		203	28.7	57.3	83.8	90.4	90.4
		216	24.3	50.7	75.0	86.0	86.0
		230	19.8	44.1	68.3	83.8	83.8
		243	17.6	39.7	63.9	81.6	81.6
		256	13.2	35.3	57.3	79.4	79.4

Remarks

Superlift mast 98.4 ft

353,000 lb 27.6 ft 360°

	Fly jib	Radius lb	0	110.2	220.5	330.7	385.8
		ft	1,000 lb				
SWSL	275.6 ft	124	68.3	83.8	86.0	–	88.2
		138	57.3	83.8	86.0	–	88.2
		151	48.5	83.8	83.8	–	86.0
		164	39.7	77.2	83.8	83.8	83.8
		177	33.1	68.3	81.6	81.6	81.6
		190	28.7	59.5	79.4	79.4	79.4
		203	24.3	52.9	77.2	77.2	77.2
		216	19.8	46.3	72.8	75.0	75.0
		230	17.6	41.9	66.1	72.8	72.8
		243	13.2	37.5	59.5	70.5	70.5
		256	11.0	33.1	55.1	68.3	68.3
		269	–	28.7	50.7	63.9	63.9
		282	–	26.5	46.3	61.7	61.7
		295	–	22.0	41.9	59.5	59.5

Working ranges fixed fly jib with SL, 15°

SFSL

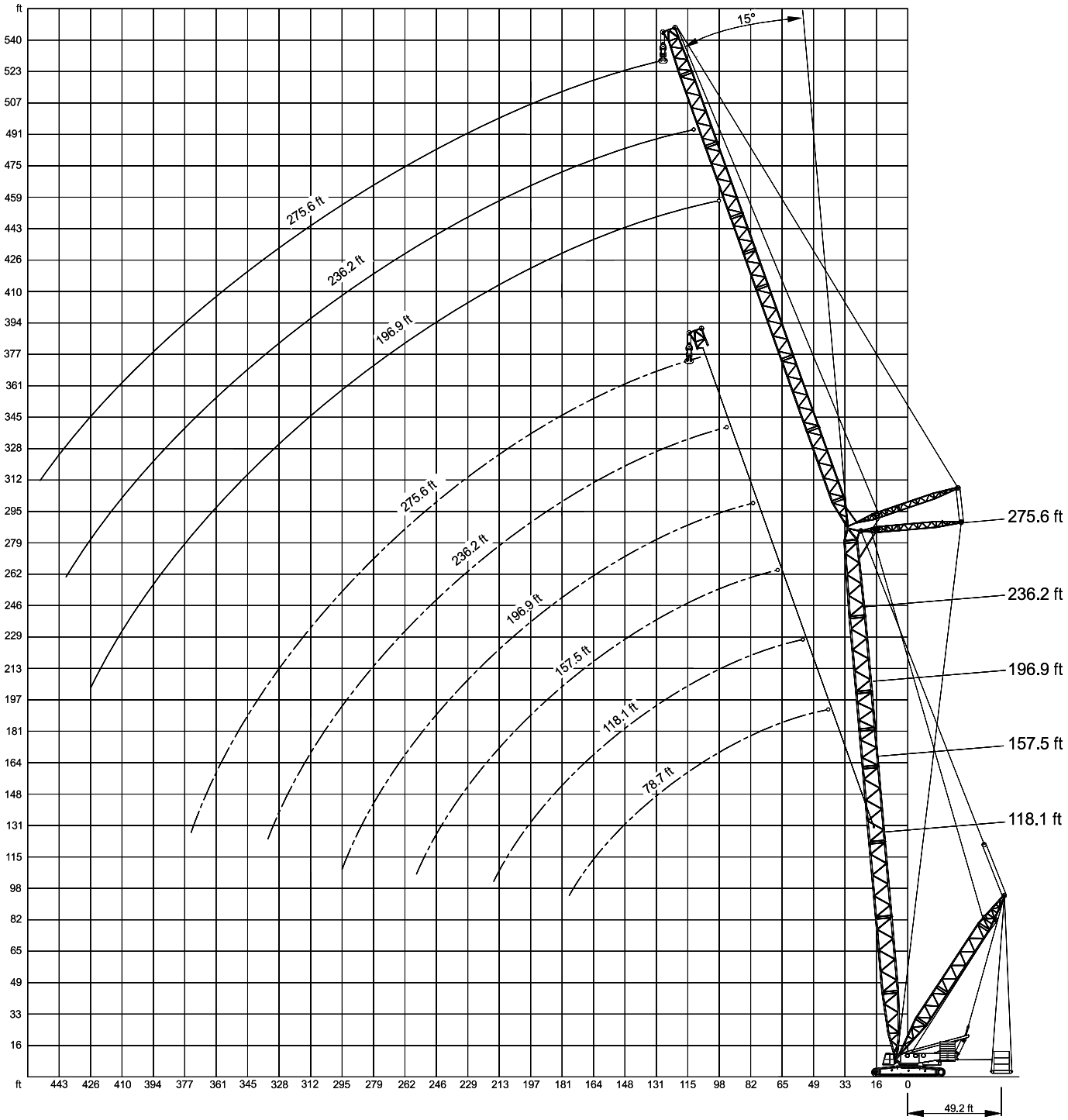

Lifting capacities fixed fly jib with SL, 15°

Main boom: 118.1 ft · SL-Radius 49.2 ft

353,000 lb | **27.6 ft** | **360°**

SL

	Fly jib	Radius	lb 0	110.2	220.5	330.7	440.9	551.2	661.4	606.3
		ft				1,000 lb				
SFSL	78.7 ft	52	326.3	458.6	588.6	661.4	661.4	–	–	661.4
		59	271.2	383.6	496.0	606.3	661.4	661.4	–	661.4
		65	229.3	328.5	425.5	522.5	621.7	628.3	–	628.3
		72	198.4	284.4	370.4	458.6	544.5	582.0	–	582.0
		79	172.0	249.1	328.5	405.7	485.0	535.7	–	535.7
		85	152.1	222.7	293.2	363.8	434.3	493.8	–	493.8
		92	134.5	198.4	262.4	328.5	392.4	458.6	458.6	458.6
		98	119.0	178.6	238.1	297.6	357.1	418.9	425.5	425.5
		111	94.8	147.7	198.4	251.3	302.0	354.9	366.0	366.0
		124	77.2	123.5	167.6	213.8	260.1	304.2	–	313.1
		138	61.7	103.6	143.3	185.2	224.9	266.8	–	269.0
		151	50.7	88.2	125.7	160.9	198.4	231.5	–	231.5
		164	39.7	75.0	108.0	143.3	176.4	202.8	–	202.8
		177	30.9	63.9	94.8	125.7	156.5	183.0	–	183.0

	Fly jib	Radius	lb 0	110.2	220.5	330.7	440.9	551.2	661.4	716.5
		ft				1,000 lb				
SFSL	118.1 ft	65	235.9	335.1	432.1	529.1	555.6	–	–	555.6
		72	202.8	291.0	377.0	463.0	540.1	540.1	–	540.1
		79	178.6	255.7	332.9	412.3	489.4	513.7	–	513.7
		85	156.5	227.1	297.6	368.2	438.7	487.2	–	487.2
		92	138.9	202.8	269.0	332.9	396.8	456.4	–	456.4
		98	123.5	183.0	242.5	302.0	361.6	423.3	425.5	425.5
		111	99.2	149.9	202.8	253.5	306.4	357.1	374.8	374.8
		124	81.6	125.7	172.0	218.3	262.4	308.6	332.9	332.9
		138	66.1	108.0	147.7	189.6	229.3	271.2	295.4	295.4
		151	52.9	90.4	127.9	165.3	202.8	238.1	262.4	262.4
		164	44.1	79.4	112.4	145.5	178.6	213.8	231.5	231.5
		177	35.3	68.3	99.2	130.1	160.9	191.8	205.0	205.0
		190	26.5	57.3	86.0	114.6	143.3	172.0	180.8	180.8
		203	19.8	48.5	77.2	103.6	130.1	156.5	160.9	160.9
		216	15.4	41.9	68.3	92.6	119.0	138.9	–	138.9

	Fly jib	Radius	lb 0	110.2	220.5	330.7	440.9	551.2	661.4	606.3
		ft				1,000 lb				
SFSL	157.5 ft	79	180.8	257.9	337.3	410.1	410.1	–	–	410.1
		85	158.7	229.3	299.8	370.4	407.9	–	–	407.9
		92	141.1	205.0	271.2	335.1	399.0	403.4	–	403.4
		98	125.7	185.2	244.7	304.2	363.8	399.0	–	399.0
		111	101.4	152.1	205.0	255.7	308.6	359.4	–	361.6
		124	81.6	127.9	174.2	218.3	264.6	310.9	–	315.3
		138	68.3	108.0	149.9	189.6	231.5	271.2	284.4	284.4
		151	55.1	92.6	130.1	165.3	202.8	240.3	255.7	255.7
		164	44.1	79.4	112.4	145.5	180.8	213.8	229.3	229.3
		177	35.3	68.3	99.2	130.1	160.9	191.8	205.0	205.0
		190	26.5	57.3	88.2	116.8	145.5	174.2	183.0	183.0
		203	19.8	48.5	77.2	103.6	130.1	156.5	163.1	163.1
		216	15.4	41.9	68.3	92.6	119.0	143.3	147.7	147.7
		230	11.0	35.3	59.5	83.8	108.0	132.3	132.3	132.3
		243	–	28.7	52.9	77.2	99.2	121.3	121.3	121.3
		256	–	24.3	46.3	68.3	90.4	101.4	–	101.4

Remarks

Superlift mast 98.4 ft

353,000 lb | **27.6 ft** | **360°**

SL

	Fly jib	Radius	lb 0	110.2	220.5	330.7	440.9	551.2	661.4	716.5
		ft				1,000 lb				
SFSL	196.9 ft	92	141.1	207.2	271.2	295.4	–	–	–	295.4
		98	125.7	185.2	246.9	293.2	293.2	–	–	293.2
		111	101.4	154.3	205.0	255.7	293.2	–	–	293.2
		124	81.6	127.9	174.2	220.5	264.6	286.6	–	286.6
		138	68.3	108.0	149.9	189.6	231.5	271.2	–	273.4
		151	55.1	92.6	130.1	165.3	202.8	240.3	255.7	255.7
		164	44.1	79.4	112.4	145.5	180.8	213.8	233.7	233.7
		177	35.3	68.3	99.2	130.1	160.9	191.8	211.6	211.6
		190	26.5	57.3	88.2	116.8	145.5	174.2	191.8	191.8
		203	19.8	48.5	77.2	103.6	130.1	156.5	174.2	174.2
		216	15.4	41.9	68.3	92.6	119.0	143.3	158.7	158.7
		230	8.8	35.3	59.5	83.8	108.0	130.1	143.3	143.3
		243	–	28.7	52.9	75.0	97.0	119.0	130.1	130.1
		256	–	24.3	46.3	68.3	90.4	110.2	116.8	116.8
		269	–	17.6	39.7	61.7	81.6	101.4	105.8	105.8
		282	–	13.2	35.3	55.1	75.0	90.4	90.4	90.4
		295	–	11.0	28.7	48.5	68.3	75.0	–	75.0

	Fly jib	Radius	lb 0	110.2	220.5	330.7	440.9	551.2	661.4	606.3
		ft				1,000 lb				
SFSL	236.2 ft	111	101.4	154.3	205.0	209.4	–	–	–	209.4
		124	81.6	127.9	174.2	207.2	–	–	–	207.2
		138	68.3	108.0	149.9	189.6	205.0	–	–	205.0
		151	55.1	92.6	130.1	165.3	200.6	–	–	200.6
		164	44.1	79.4	112.4	145.5	180.8	194.0	–	194.0
		177	35.3	68.3	99.2	130.1	160.9	183.0	–	183.0
		190	26.5	57.3	86.0	114.6	143.3	172.0	–	172.0
		203	19.8	48.5	77.2	103.6	130.1	156.5	160.9	160.9
		216	13.2	39.7	66.1	92.6	116.8	143.3	149.9	149.9
		230	8.8	33.1	59.5	83.8	105.8	130.1	141.1	141.1
		243	–	28.7	50.7	75.0	97.0	119.0	130.1	130.1
		256	–	22.0	44.1	66.1	88.2	110.2	121.3	119.0
		269	–	17.6	39.7	59.5	81.6	101.4	112.4	110.2
		282	–	13.2	33.1	52.9	72.8	92.6	101.4	101.4
		295	–	8.8	28.7	48.5	66.1	86.0	88.2	88.2
		308	–	–	24.3	41.9	61.7	77.2	77.2	77.2
		321	–	–	19.8	37.5	55.1	66.1	66.1	66.1
		335	–	–	15.4	33.1	50.7	52.9	–	52.9

	Fly jib	Radius	lb 0	110.2	220.5	330.7	440.9	551.2	661.4	606.3
		ft				1,000 lb				
SFSL	275.6 ft	124	83.9	127.9	149.9	152.1	–	–	–	152.1
		138	68.3	108.0	149.9	149.9	–	–	–	149.9
		151	55.1	92.6	130.1	149.9	–	–	–	149.9
		164	44.1	79.4	112.4	145.5	147.7	–	–	147.7
		177	35.3	68.3	99.2	130.1	145.5	–	–	145.5
		190	26.5	57.3	86.0	114.6	141.1	141.1	–	141.1
		203	19.8	48.5	77.2	103.6	130.1	136.7	–	136.7
		216	13.2	39.7	66.1	92.6	116.8	132.3	–	132.3
		230	8.8	33.1	59.5	83.8	105.8	125.7	–	125.7
		243	–	28.7	50.7	75.0	97.0	119.0	121.3	121.3
		256	–	22.0	44.1	66.1	88.2	110.2	114.6	114.6
		269	–	17.6	37.5	59.5	81.6	101.4	110.2	110.2
		282	–	13.2	33.1	52.9	72.8	92.6	103.6	101.4
		295	–	8.8	28.7	48.5	66.1	86.0	97.0	94.8
		308	–	–	24.3	41.9	59.5	79.4	86.0	86.0
		321	–	–	19.8	37.5	55.1	72.8	77.2	77.2
		335	–	–	15.4	33.1	50.7	66.1	66.1	66.1
		348	–	–	13.2	28.7	44.1	57.3	57.3	57.3
		361	–	–	8.8	24.3	39.7	48.5	48.5	48.5
		374	–	–	–	22.0	35.3	37.5	–	37.5

Lifting capacities fixed fly jib with SL, 15°

Main boom: 157.5 ft · SL-Radius 49.2 ft

353,000 lb 27.6 ft 360°

SL

	Fly jib	Radius ft	lb 0	110.2	220.5	330.7	440.9	551.2	661.4	716.5
			1,000 lb							
SFSL	78.7 ft	52	324.1	454.2	586.4	657.0	657.0	–	–	657.0
		59	269.0	379.2	491.6	604.1	646.0	–	–	646.0
		65	224.9	324.1	421.1	518.1	617.3	623.9	–	623.9
		72	194.0	280.0	366.0	454.2	540.1	604.1	–	604.1
		79	167.6	244.7	321.9	401.2	478.4	557.8	571.0	571.0
		85	145.5	216.1	286.6	357.1	429.9	500.4	531.3	531.3
		92	127.9	191.8	257.9	321.9	388.0	451.9	493.8	493.8
		98	112.4	172.0	231.5	293.2	352.7	412.3	458.6	458.6
		111	88.2	141.1	191.8	244.7	295.4	348.3	399.0	403.4
		124	70.5	116.8	160.9	207.2	253.5	299.8	343.9	350.5
		138	55.1	97.0	138.9	178.6	220.5	260.1	302.0	304.2
		151	41.9	81.6	119.0	154.3	191.8	229.3	264.6	264.6
		164	30.9	68.3	101.4	136.7	169.8	202.8	229.3	229.3
		177	22.0	55.1	88.2	119.0	149.9	180.8	200.6	200.6
		190	15.4	46.3	77.2	105.8	134.5	163.1	176.4	176.4
		203	8.8	37.5	66.1	94.8	121.3	147.7	156.5	156.5
		216	–	30.9	57.3	83.8	108.0	134.5	141.1	141.1

	Fly jib	Radius ft	lb 0	110.2	220.5	330.7	440.9	551.2	661.4	716.5
			1,000 lb							
SFSL	118.1 ft	72	200.6	286.6	374.8	460.8	478.4	–	–	478.4
		79	174.2	251.3	330.7	407.9	476.2	476.2	–	476.2
		85	152.1	222.7	293.2	363.8	434.3	474.0	–	474.0
		92	134.5	198.4	262.4	328.5	392.4	458.6	471.8	471.8
		98	119.0	178.6	238.1	297.6	357.1	416.7	445.3	445.3
		111	94.8	145.5	198.4	249.1	302.0	352.7	388.0	388.0
		124	75.0	121.3	165.3	211.6	257.9	304.2	346.1	346.1
		138	59.5	101.4	141.1	183.0	222.7	264.6	304.2	308.6
		151	46.3	86.0	121.3	158.7	196.2	233.7	269.0	275.6
		164	35.3	72.8	105.8	138.9	174.2	207.2	240.3	246.9
		177	26.5	59.5	92.6	123.5	154.3	185.2	216.1	218.3
		190	19.8	50.7	79.4	108.0	136.7	167.6	194.0	194.0
		203	13.2	41.9	68.3	97.0	123.5	149.9	172.0	172.0
		216	–	33.1	59.5	86.0	112.4	136.7	154.3	154.3
		230	–	26.5	50.7	77.2	101.4	123.5	136.7	136.7
		243	–	19.8	44.1	68.3	90.4	112.4	123.5	123.5
		256	–	15.4	37.5	59.5	81.6	103.6	105.8	105.8

	Fly jib	Radius ft	lb 0	110.2	220.5	330.7	440.9	551.2	661.4	716.5
			1,000 lb							
SFSL	157.5 ft	85	156.5	227.1	297.6	357.1	357.1	–	–	357.1
		92	136.7	202.8	266.8	330.7	357.1	–	–	357.1
		98	121.3	180.8	240.3	299.8	357.1	357.1	–	357.1
		111	97.0	147.7	200.6	251.3	304.2	352.7	–	352.7
		124	77.2	123.5	167.6	213.8	260.1	306.4	328.5	328.5
		138	61.7	103.6	143.3	185.2	224.9	266.8	302.0	302.0
		151	48.5	86.0	123.5	160.9	198.4	233.7	271.2	273.4
		164	37.5	72.8	108.0	141.1	174.2	207.2	242.5	246.9
		177	28.7	61.7	92.6	123.5	154.3	185.2	218.3	220.5
		190	19.8	50.7	81.6	110.2	138.9	167.6	196.2	198.4
		203	13.2	41.9	70.5	97.0	125.7	152.1	176.4	176.4
		216	–	35.3	61.7	88.2	112.4	136.7	156.5	156.5
		230	–	26.5	52.9	77.2	101.4	125.7	141.1	141.1
		243	–	22.0	44.1	68.3	92.6	114.6	125.7	125.7
		256	–	15.4	37.5	61.7	83.8	103.6	112.4	112.4
		269	–	11.0	33.1	52.9	75.0	94.8	103.6	103.6
		282	–	–	26.5	46.3	66.1	88.2	94.8	94.8
		295	–	–	22.0	41.9	59.5	79.4	79.4	79.4

353,000 lb 27.6 ft 360°

SL

	Fly jib	Radius ft	lb 0	110.2	220.5	330.7	440.9	551.2	661.4	716.5
			1,000 lb							
SFSL	196.9 ft	98	123.5	183.0	242.5	264.6	–	–	–	264.6
		111	97.0	149.9	200.6	253.5	264.6	–	–	264.6
		124	79.4	123.5	169.8	216.1	260.1	264.6	–	264.6
		138	61.7	103.6	145.5	185.2	227.1	257.9	–	257.9
		151	48.5	88.2	123.5	160.9	198.4	235.9	251.3	251.3
		164	37.5	75.0	108.0	141.1	174.2	209.4	235.9	235.9
		177	28.7	61.7	94.8	125.7	156.5	187.4	216.1	216.1
		190	19.8	50.7	81.6	110.2	138.9	167.6	196.2	198.4
		203	13.2	41.9	70.5	99.2	125.7	152.1	178.6	183.0
		216	8.8	35.3	61.7	88.2	112.4	136.7	163.1	167.6
		230	–	28.7	52.9	77.2	101.4	125.7	147.7	152.1
		243	–	22.0	44.1	68.3	92.6	114.6	136.7	136.7
		256	–	15.4	37.5	59.5	83.8	103.6	125.7	125.7
		269	–	11.0	33.1	52.9	75.0	94.8	112.4	112.4
		282	–	–	26.5	46.3	66.1	88.2	101.4	101.4
		295	–	–	22.0	41.9	59.5	79.4	90.4	90.4
		308	–	–	17.6	35.3	52.9	72.8	81.6	81.6
		321	–	–	13.2	30.9	48.5	66.1	68.3	68.3
		335	–	–	8.8	26.5	44.1	57.3	57.3	57.3

	Fly jib	Radius ft	lb 0	110.2	220.5	330.7	440.9	551.2	661.4	716.5
			1,000 lb							
SFSL	236.2 ft	111	99.2	149.9	189.6	191.8	–	–	–	191.8
		124	79.4	125.7	169.8	189.6	–	–	–	189.6
		138	63.9	103.6	145.5	185.2	189.6	–	–	189.6
		151	48.5	88.2	125.7	160.9	187.4	–	–	187.4
		164	37.5	75.0	108.0	141.1	176.4	183.0	–	183.0
		177	28.7	61.7	94.8	125.7	156.5	178.6	–	178.6
		190	19.8	50.7	81.6	110.2	138.9	167.6	–	169.8
		203	13.2	41.9	70.5	97.0	125.7	152.1	160.9	160.9
		216	–	35.3	61.7	88.2	112.4	136.7	152.1	152.1
		230	–	26.5	52.9	77.2	101.4	125.7	143.3	143.3
		243	–	22.0	44.1	68.3	90.4	114.6	134.5	134.5
		256	–	15.4	37.5	59.5	81.6	103.6	125.7	125.7
		269	–	11.0	30.9	52.9	75.0	94.8	114.6	116.8
		282	–	–	26.5	46.3	66.1	86.0	105.8	108.0
		295	–	–	22.0	39.7	59.5	79.4	97.0	101.4
		308	–	–	17.6	35.3	52.9	72.8	90.4	90.4
		321	–	–	13.2	30.9	48.5	66.1	79.4	79.4
		335	–	–	8.8	26.5	41.9	59.5	68.3	68.3
		348	–	–	–	22.0	37.5	52.9	59.5	59.5
		361	–	–	–	17.6	33.1	48.5	48.5	48.5
		374	–	–	–	13.2	28.7	39.7	39.7	39.7

	Fly jib	Radius ft	lb 0	110.2	220.5	330.7	440.9	551.2	661.4	716.5
			1,000 lb							
SFSL	275.6 ft	124	81.6	125.7	138.9	–	–	–	–	141.1
		138	63.9	105.8	138.9	138.9	–	–	–	138.9
		151	50.7	88.2	125.7	138.9	–	–	–	138.9
		164	39.7	75.0	108.0	138.9	138.9	–	–	138.9
		177	30.9	61.7	94.8	125.7	136.7	–	–	136.7
		190	22.0	52.9	81.6	110.2	134.5	134.5	–	134.5
		203	15.4	41.9	70.5	99.2	125.7	130.1	–	130.1
		216	8.8	35.3	61.7	88.2	112.4	125.7	–	125.7
		230	–	28.7	52.9	77.2	101.4	121.3	–	121.3
		243	–	22.0	44.1	68.3	92.6	114.6	116.8	116.8
		256	–	15.4	37.5	59.5	83.8	103.6	110.2	110.2
		269	–	11.0	33.1	52.9	75.0	94.8	105.8	105.8
		282	–	–	26.5	46.3	66.1	86.0	101.4	101.4
		295	–	–	22.0	39.7	59.5	79.4	94.8	94.8
		308	–	–	17.6	35.3	52.9	72.8	90.4	90.4
		321	–	–	13.2	30.9	48.5	66.1	83.8	83.8
		335	–	–	8.8	26.5	41.9	59.5	77.2	77.2
		348	–	–	–	22.0	37.5	52.9	68.3	68.3
		361	–	–	–	17.6	33.1	48.5	59.5	59.5
		374	–	–	–	13.2	28.7	44.1	50.7	50.7
		387	–	–	–	11.0	24.3	39.7	41.9	41.9
		400	–	–	–	–	22.0	33.1	33.1	33.1

Lifting capacities fixed fly jib with SL, 15°

Main boom: 196.9 ft · SL-Radius 49.2 ft

353,000 lb | **27.6 ft** | **360°**

SL

	Fly jib	Radius	lb 0	110.2	220.5	330.7	440.9	551.2	661.4	716.5
		ft				1,000 lb				
		72	198.4	284.4	370.4	392.4	–	–	–	392.4
		79	169.8	249.1	326.3	392.4	392.4	–	–	392.4
		85	147.7	218.3	288.8	359.4	392.4	–	–	392.4
		92	130.1	194.0	260.1	324.1	388.0	392.4	–	392.4
		98	114.6	174.2	233.7	293.2	352.7	392.4	–	392.4
		111	88.2	141.1	191.8	244.7	295.4	348.3	368.2	368.2
		124	68.3	114.6	160.9	207.2	251.3	297.6	341.7	341.7
		138	52.9	94.8	136.7	176.4	218.3	257.9	299.8	313.1
SFSL	118.1 ft	151	39.7	79.4	116.8	152.1	189.6	227.1	264.6	282.2
		164	28.7	63.9	99.2	134.5	167.6	200.6	233.7	251.3
		177	19.8	52.9	86.0	116.8	147.7	178.6	209.4	224.9
		190	11.0	41.9	72.8	103.6	132.3	160.9	189.6	202.8
		203	–	33.1	61.7	90.4	116.8	143.3	169.8	180.8
		216	–	26.5	52.9	79.4	105.8	130.1	154.3	158.7
		230	–	19.8	44.1	68.3	94.8	116.8	136.7	136.7
		243	–	13.2	37.5	59.5	83.8	105.8	119.0	119.0
		256	–	–	30.9	52.9	75.0	97.0	105.8	105.8
		269	–	–	24.3	46.3	66.1	88.2	92.6	92.6
		282	–	–	19.8	39.7	59.5	79.4	86.0	86.0

	Fly jib	Radius	lb 0	110.2	220.5	330.7	440.9	551.2	661.4	716.5
		ft				1,000 lb				
		85	152.1	222.7	293.2	297.6	–	–	–	297.6
		92	134.5	198.4	262.4	297.6	–	–	–	297.6
		98	116.8	176.4	238.1	297.6	297.6	–	–	297.6
		111	92.6	143.3	196.2	246.9	297.6	297.6	–	297.6
		124	72.8	119.0	163.1	209.4	255.7	291.0	–	291.0
		138	55.1	97.0	138.9	178.6	220.5	260.1	280.0	280.0
		151	41.9	81.6	119.0	154.3	191.8	229.3	264.6	264.6
		164	30.9	66.1	101.4	134.5	169.8	202.8	235.9	242.5
		177	22.0	55.1	88.2	119.0	149.9	180.8	211.6	222.7
SFSL	157.5 ft	190	13.2	44.1	75.0	103.6	132.3	160.9	189.6	202.8
		203	–	35.3	63.9	92.6	119.0	145.5	172.0	185.2
		216	–	26.5	52.9	79.4	105.8	130.1	156.5	167.6
		230	–	19.8	44.1	70.5	94.8	119.0	141.1	152.1
		243	–	13.2	37.5	61.7	83.8	108.0	130.1	136.7
		256	–	8.8	30.9	52.9	75.0	97.0	119.0	123.5
		269	–	–	24.3	46.3	66.1	88.2	108.0	112.4
		282	–	–	19.8	39.7	59.5	79.4	99.2	101.4
		295	–	–	15.4	33.1	52.9	72.8	90.4	90.4
		308	–	–	11.0	28.7	46.3	63.9	79.4	79.7
		321	–	–	–	24.3	41.9	59.5	66.1	66.1

	Fly jib	Radius	lb 0	110.2	220.5	330.7	440.9	551.2	661.4	716.5
		ft				1,000 lb				
		98	121.3	180.8	222.7	224.9	–	–	–	224.9
		111	94.8	145.5	198.4	224.9	–	–	–	224.9
		124	75.0	121.3	165.3	211.6	224.9	–	–	224.9
		138	57.3	99.2	141.1	180.8	222.7	222.7	–	222.7
		151	44.1	83.8	119.0	156.5	194.0	220.5	–	220.5
		164	33.1	68.3	103.6	136.7	169.8	202.8	220.5	220.5
		177	22.0	55.1	88.2	119.0	149.9	180.8	205.0	205.0
		190	15.4	44.1	75.0	105.8	134.5	163.1	191.8	191.8
		203	–	35.3	63.9	92.6	119.0	145.5	172.0	178.6
SFSL	196.9 ft	216	–	28.7	55.1	81.6	105.8	132.3	156.5	163.1
		230	–	19.8	46.3	70.5	94.8	119.0	143.3	152.1
		243	–	15.4	37.5	61.7	86.0	108.0	130.1	138.9
		256	–	8.8	30.9	52.9	75.0	97.0	119.0	127.9
		269	–	–	24.3	46.3	68.3	88.2	108.0	116.8
		282	–	–	19.8	39.7	59.5	79.4	99.2	105.8
		295	–	–	15.4	33.1	52.9	72.8	90.4	97.0
		308	–	–	11.0	28.7	46.3	63.9	83.8	88.2
		321	–	–	–	24.3	41.9	57.3	75.0	77.2
		335	–	–	–	19.8	35.3	52.9	66.1	66.1
		348	–	–	–	15.4	30.9	46.3	57.3	57.3
		361	–	–	–	11.0	26.5	41.9	46.3	46.3

353,000 lb | **27.6 ft** | **360°**

SL

	Fly jib	Radius	lb 0	110.2	220.5	330.7	440.9	551.2	661.4	716.5
		ft				1,000 lb				
		111	97.0	147.7	167.6	–	–	–	–	169.8
		124	75.0	121.3	167.6	169.8	–	–	–	169.8
		138	59.5	101.4	141.1	169.8	169.8	–	–	169.8
		151	44.1	83.8	121.3	156.5	167.6	–	–	167.6
		164	33.1	68.3	103.6	136.7	165.3	165.3	–	165.3
		177	24.3	57.3	88.2	119.0	152.1	163.1	–	163.1
		190	15.4	46.3	75.0	105.8	134.5	158.7	–	158.7
		203	–	35.3	63.9	92.6	119.0	145.5	152.1	152.1
		216	–	28.7	55.1	81.6	105.8	132.3	143.3	143.3
		230	–	19.8	46.3	70.5	94.8	119.0	136.7	136.7
SFSL	236.2 ft	243	–	15.4	37.5	61.7	86.0	108.0	127.9	127.9
		256	–	8.8	30.9	52.9	75.0	97.0	119.0	121.3
		269	–	–	24.3	46.3	66.1	88.2	108.0	114.6
		282	–	–	19.8	39.7	59.5	79.4	99.2	105.8
		295	–	–	15.4	33.1	52.9	72.8	90.4	99.2
		308	–	–	8.8	28.7	46.3	63.9	83.8	90.4
		321	–	–	–	22.0	39.7	57.3	75.0	81.6
		335	–	–	–	17.6	35.3	52.9	68.3	72.8
		348	–	–	–	13.2	30.9	46.3	61.7	63.9
		361	–	–	–	11.0	26.5	41.9	55.1	55.1
		374	–	–	–	–	22.0	37.5	46.3	46.3
		387	–	–	–	–	17.6	33.1	37.5	37.5
		400	–	–	–	–	13.2	28.7	30.9	30.9

	Fly jib	Radius	lb 0	110.2	220.5	330.7	440.9	551.2	661.4	716.5
		ft				1,000 lb				
		124	79.4	123.5	123.5	–	–	–	–	125.7
		138	61.7	103.6	123.5	125.7	–	–	–	125.7
		151	46.3	86.0	123.5	125.7	–	–	–	125.7
		164	35.3	70.5	105.8	125.7	125.7	–	–	125.7
		177	24.3	57.3	90.4	121.3	123.5	–	–	123.5
		190	15.4	46.3	77.2	105.8	121.3	–	–	121.3
		203	8.8	37.5	66.1	94.8	121.3	121.3	–	121.3
		216	–	28.7	55.1	81.6	108.0	116.8	–	116.8
		230	–	22.0	46.3	72.8	97.0	112.4	–	112.4
		243	–	15.4	39.7	61.7	86.0	108.0	110.2	110.2
		256	–	8.8	33.1	55.1	77.2	99.2	105.8	105.8
SFSL	275.6 ft	269	–	–	26.5	46.3	68.3	88.2	101.4	101.4
		282	–	–	19.8	39.7	59.5	79.4	97.0	97.0
		295	–	–	15.4	35.3	52.9	72.8	92.6	92.6
		308	–	–	11.0	28.7	46.3	66.1	83.8	88.2
		321	–	–	–	24.3	41.9	59.5	77.2	83.8
		335	–	–	–	19.8	35.3	52.9	68.3	77.2
		348	–	–	–	15.4	30.9	46.3	63.9	68.3
		361	–	–	–	11.0	26.5	41.9	57.3	59.5
		374	–	–	–	–	22.0	37.5	52.9	52.9
		387	–	–	–	–	17.6	33.1	46.3	46.3
		400	–	–	–	–	15.4	28.7	37.5	37.5
		414	–	–	–	–	11.0	24.3	30.9	30.9
		427	–	–	–	–	–	19.8	24.3	24.3
		440	–	–	–	–	–	17.6	17.6	17.6

Lifting capacities fixed fly jib with SL, 15°

Main boom: 236.2 ft · SL-Radius 49.2 ft

353,000 lb — **27.6 ft** — **360°**

SL

	Fly jib	Radius	lb 0	110.2	220.5	330.7	440.9	551.2	661.4	716.5
		ft				1,000 lb				
SFSL	157.5 ft	92	130.1	196.2	229.3	233.7	–	–	–	233.7
		98	114.6	174.2	229.3	233.7	–	–	–	233.7
		111	88.2	138.9	191.8	233.7	233.7	–	–	233.7
		124	66.1	114.6	158.7	205.0	233.7	–	–	233.7
		138	50.7	92.6	134.5	174.2	216.1	233.7	–	233.7
		151	35.3	75.0	112.4	149.9	187.4	224.9	233.4	233.7
		164	24.3	61.7	97.0	130.1	163.1	198.4	222.7	222.7
		177	15.4	48.5	81.6	112.4	143.3	174.2	207.2	207.2
		190	–	37.5	68.3	99.2	127.9	156.5	185.2	191.8
		203	–	28.7	57.3	86.0	112.4	138.9	165.3	176.4
		216	–	19.8	46.3	72.8	99.2	125.7	149.9	163.1
		230	–	13.2	37.5	63.9	88.2	112.4	136.7	147.7
		243	–	–	30.9	55.1	77.2	101.4	123.5	134.5
		256	–	–	24.3	46.3	68.3	90.4	112.4	123.5
		269	–	–	17.6	39.7	59.5	81.6	101.4	112.4
		282	–	–	13.2	33.1	52.9	72.8	92.6	101.4
		295	–	–	–	26.5	46.3	63.9	83.8	90.4
		308	–	–	–	22.0	39.7	57.3	75.2	79.4
		321	–	–	–	15.4	33.1	50.7	68.3	70.5
		335	–	–	–	11.0	28.7	46.3	59.5	59.5
		348	–	–	–	–	24.3	39.7	50.7	50.7
		361	–	–	–	–	19.8	35.3	39.7	39.7

	Fly jib	Radius	lb 0	110.2	220.5	330.7	440.9	551.2	661.4	716.5
		ft				1,000 lb				
SFSL	196.9 ft	111	90.4	143.3	178.6	180.8	–	–	–	180.8
		124	70.5	116.8	163.1	180.8	–	–	–	180.8
		138	52.9	94.8	136.7	176.4	180.8	–	–	180.8
		151	39.7	77.2	114.6	152.1	180.8	–	–	180.8
		164	26.5	61.7	99.2	132.3	165.3	180.8	–	180.8
		177	17.6	50.7	83.8	114.6	145.5	176.4	178.6	178.6
		190	8.8	39.7	70.5	99.2	127.9	156.5	169.8	169.8
		203	–	28.7	57.3	86.0	114.6	141.1	158.7	158.7
		216	–	22.0	48.5	75.0	101.4	125.7	149.9	149.9
		230	–	15.4	39.7	63.9	90.4	114.6	136.7	138.9
		243	–	8.8	30.9	55.1	79.4	101.4	125.7	130.1
		256	–	–	24.3	46.3	68.3	90.4	112.4	121.3
		269	–	–	17.6	39.7	61.7	81.6	103.6	112.4
		282	–	–	13.2	33.1	52.9	72.8	92.6	103.6
		295	–	–	–	26.5	46.3	66.1	83.8	94.8
		308	–	–	–	22.0	39.7	57.3	77.2	83.8
		321	–	–	–	15.4	33.1	50.7	68.3	75.0
		335	–	–	–	11.0	28.7	46.3	61.7	66.1
		348	–	–	–	–	24.3	39.7	55.1	57.3
		361	–	–	–	–	19.8	35.3	48.5	48.5
		374	–	–	–	–	15.4	30.9	39.7	39.7
		387	–	–	–	–	11.0	26.5	33.1	33.1
		400	–	–	–	–	–	22.0	24.3	24.3

Remarks

Superlift mast 98.4 ft

353,000 lb — **27.6 ft** — **360°**

SL

	Fly jib	Radius	lb 0	110.2	220.5	330.7	440.9	551.2	661.4	716.5
		ft				1,000 lb				
SFSL	236.2 ft	124	72.8	119.0	136.7	138.9	–	–	–	138.9
		138	55.1	97.0	136.7	138.9	–	–	–	138.9
		151	39.7	79.4	116.8	138.9	138.9	–	–	138.9
		164	28.7	63.9	99.2	132.3	138.9	–	–	138.9
		177	17.6	50.7	83.8	114.6	138.9	138.9	–	138.9
		190	8.8	39.7	70.5	101.4	130.1	134.5	–	134.5
		203	–	30.9	59.5	88.2	114.6	130.1	–	130.1
		216	–	22.0	48.5	75.0	101.4	123.5	123.5	123.5
		230	–	15.4	39.7	63.9	90.4	114.6	119.0	119.0
		243	–	8.8	33.1	55.1	79.4	103.6	114.6	114.6
		256	–	–	24.3	46.3	70.5	92.6	108.0	108.0
		269	–	–	17.6	39.7	61.7	81.6	103.6	103.6
		282	–	–	13.2	33.1	52.9	72.8	92.6	97.0
		295	–	–	–	26.5	46.3	66.1	83.8	92.6
		308	–	–	–	22.0	39.7	57.3	77.2	83.8
		321	–	–	–	15.4	33.1	50.7	68.3	77.2
		335	–	–	–	11.0	28.7	46.3	61.7	68.3
		348	–	–	–	–	24.3	39.7	55.1	59.5
		361	–	–	–	–	19.8	35.3	50.7	52.9
		374	–	–	–	–	15.4	28.7	44.1	46.3
		387	–	–	–	–	11.0	24.3	37.5	37.5
		400	–	–	–	–	–	22.0	30.9	30.9
		414	–	–	–	–	–	17.6	24.3	24.3
		427	–	–	–	–	–	13.2	17.6	17.6
		440	–	–	–	–	–	11.0	11.0	11.0

	Fly jib	Radius	lb 0	110.2	220.5	330.7	440.9	551.2	661.4	716.5
		ft				1,000 lb				
SFSL	275.6 ft	138	55.1	99.2	103.6	–	–	–	–	105.8
		151	41.9	81.6	103.6	105.8	–	–	–	105.8
		164	30.9	66.1	101.4	105.8	–	–	–	105.8
		177	19.8	52.9	86.0	105.8	105.8	–	–	105.8
		190	11.0	41.9	72.8	103.6	105.8	–	–	105.8
		203	–	33.1	61.7	90.4	103.6	103.6	–	103.6
		216	–	24.3	50.7	77.2	101.4	101.4	–	101.4
		230	–	17.6	41.9	66.1	90.4	99.2	–	99.2
		243	–	11.0	33.1	57.3	81.6	97.0	97.0	97.0
		256	–	–	26.5	48.5	70.5	92.6	92.6	92.6
		269	–	–	19.8	41.9	61.7	83.8	90.4	90.4
		282	–	–	13.2	35.3	55.1	75.0	88.2	88.2
		295	–	–	8.8	28.7	46.3	66.1	83.8	83.8
		308	–	–	–	22.0	39.7	59.5	77.2	79.4
		321	–	–	–	17.6	35.3	52.9	70.5	77.2
		335	–	–	–	13.2	28.7	46.3	63.9	70.5
		348	–	–	–	8.8	24.3	39.7	57.3	61.7
		361	–	–	–	–	19.8	35.3	50.7	55.1
		374	–	–	–	–	15.4	30.9	46.3	48.5
		387	–	–	–	–	11.0	26.5	39.7	41.9
		400	–	–	–	–	–	22.0	35.3	35.3
		414	–	–	–	–	–	17.6	30.9	30.9
		427	–	–	–	–	–	13.2	24.3	24.3
		440	–	–	–	–	–	11.0	17.6	17.6
		453	–	–	–	–	–	–	13.2	13.2

Lifting capacities fixed fly jib with SL, 15°

Main boom: 275.6 ft · SL-Radius 49.2 ft

353,000 lb | **27.6 ft** | **360°**

SL

Fly jib		Radius	lb 0	110.2	220.5	330.7	440.9	551.2	661.4	716.5
		ft				1,000 lb				
		111	86.0	134.5	134.5	–	–	–	–	136.7
		124	66.1	112.4	134.5	136.7	–	–	–	136.7
		138	48.5	92.6	132.3	136.7	–	–	–	136.7
		151	33.1	72.8	110.2	136.7	136.7	–	–	136.7
		164	22.0	57.3	92.6	127.9	136.7	–	–	136.7
		177	11.0	44.1	77.2	110.2	136.7	136.7	–	136.7
		190	–	33.1	63.9	94.8	123.5	134.5	–	134.5
		203	–	24.3	52.9	81.6	108.0	127.9	127.6	127.9
		216	–	15.4	41.9	68.3	94.8	121.3	123.5	123.5
		230	–	8.8	33.1	57.3	83.8	108.0	116.8	116.8
		243	–	–	24.3	48.5	72.8	94.8	112.4	112.4
SFSL	**196.9 ft**	256	–	–	17.6	39.7	61.7	86.0	105.8	105.8
		269	–	–	11.0	33.1	55.1	75.0	97.0	101.4
		282	–	–	–	26.5	46.3	66.1	86.0	94.8
		295	–	–	–	19.8	39.7	59.5	77.2	83.8
		308	–	–	–	15.4	33.1	50.7	70.5	77.2
		321	–	–	–	8.8	26.5	44.1	61.7	68.3
		335	–	–	–	–	22.0	37.5	55.1	59.5
		348	–	–	–	–	17.6	33.1	48.5	52.9
		361	–	–	–	–	13.2	28.7	44.1	44.1
		374	–	–	–	–	8.8	22.0	37.5	37.5
		387	–	–	–	–	–	17.6	30.9	30.9
		400	–	–	–	–	–	15.4	24.3	24.3
		414	–	–	–	–	–	11.0	17.6	17.6
		427	–	–	–	–	–	–	11.0	11.0

353,000 lb | **27.6 ft** | **360°**

SL

Fly jib		Radius	lb 0	110.2	220.5	330.7	440.9	551.2	661.4	716.5
		ft				1,000 lb				
		138	50.7	83.8	83.8	–	–	–	–	83.8
		151	35.3	79.4	83.8	–	–	–	–	83.8
		164	24.3	61.7	83.8	83.8	–	–	–	83.8
		177	13.2	48.5	81.6	83.8	–	–	–	83.8
		190	–	37.5	68.3	83.8	83.8	–	–	83.8
		203	–	26.5	55.1	83.8	83.8	–	–	83.8
		216	–	19.8	46.3	72.8	83.8	83.8	–	83.8
		230	–	11.0	35.3	61.7	81.6	81.6	–	81.6
		243	–	–	28.7	50.7	75.0	81.6	–	81.6
		256	–	–	19.8	41.9	66.1	79.4	79.4	79.4
		269	–	–	13.2	35.3	57.3	77.2	77.2	77.2
SFSL	**275.6 ft**	282	–	–	8.8	28.7	48.5	68.3	75.0	75.0
		295	–	–	–	22.0	41.9	59.5	72.8	72.8
		308	–	–	–	15.4	35.3	52.9	70.5	70.5
		321	–	–	–	11.0	28.7	46.3	63.9	68.3
		335	–	–	–	–	22.0	39.7	57.3	59.5
		348	–	–	–	–	17.6	33.1	50.7	52.9
		361	–	–	–	–	13.2	28.7	44.1	46.3
		374	–	–	–	–	8.8	24.3	39.7	41.9
		387	–	–	–	–	–	19.8	33.1	35.3
		400	–	–	–	–	–	15.4	28.7	30.9
		414	–	–	–	–	–	11.0	24.3	24.3
		427	–	–	–	–	–	–	19.8	19.8
		440	–	–	–	–	–	–	13.2	13.2
		453	–	–	–	–	–	–	8.8	8.8

Fly jib		Radius	lb 0	110.2	220.5	330.7	440.9	551.2	661.4	716.5
		ft				1,000 lb				
		124	66.1	150.8	105.8	–	–	–	–	105.8
		138	48.5	94.8	105.8	105.8	–	–	–	105.8
		151	35.3	75.0	105.8	105.8	–	–	–	105.8
		164	22.0	59.5	94.8	105.8	–	–	–	105.8
		177	13.2	46.3	79.4	105.8	105.8	–	–	105.8
		190	–	35.3	66.1	94.8	105.8	–	–	105.8
		203	–	24.3	52.9	81.6	105.8	105.8	–	105.8
		216	–	15.4	44.1	70.5	97.0	101.4	–	101.4
		230	–	8.8	33.1	59.5	83.8	99.2	99.2	99.2
		243	–	–	26.5	48.5	72.8	97.0	97.0	97.0
		256	–	–	19.8	41.9	63.9	86.0	92.6	92.6
SFSL	**236.9 ft**	269	–	–	13.2	33.1	55.1	75.0	88.2	88.2
		282	–	–	–	26.5	46.3	66.1	86.0	86.0
		295	–	–	–	19.8	39.7	59.5	77.2	81.6
		308	–	–	–	15.4	33.1	50.7	70.5	75.0
		321	–	–	–	8.8	26.5	44.1	61.7	66.1
		335	–	–	–	–	22.0	39.7	55.1	59.5
		348	–	–	–	–	17.6	33.1	48.5	52.9
		361	–	–	–	–	13.2	28.7	44.1	46.3
		374	–	–	–	–	8.8	22.0	37.5	39.7
		387	–	–	–	–	–	17.6	33.1	33.1
		400	–	–	–	–	–	13.2	26.5	26.5
		414	–	–	–	–	–	11.0	22.0	22.0
		427	–	–	–	–	–	–	15.4	15.4
		440	–	–	–	–	–	–	11.0	11.0

Remarks

Superlift mast 98.4 ft

Working ranges fixed jib SFVL with SL, 13°

SFVL

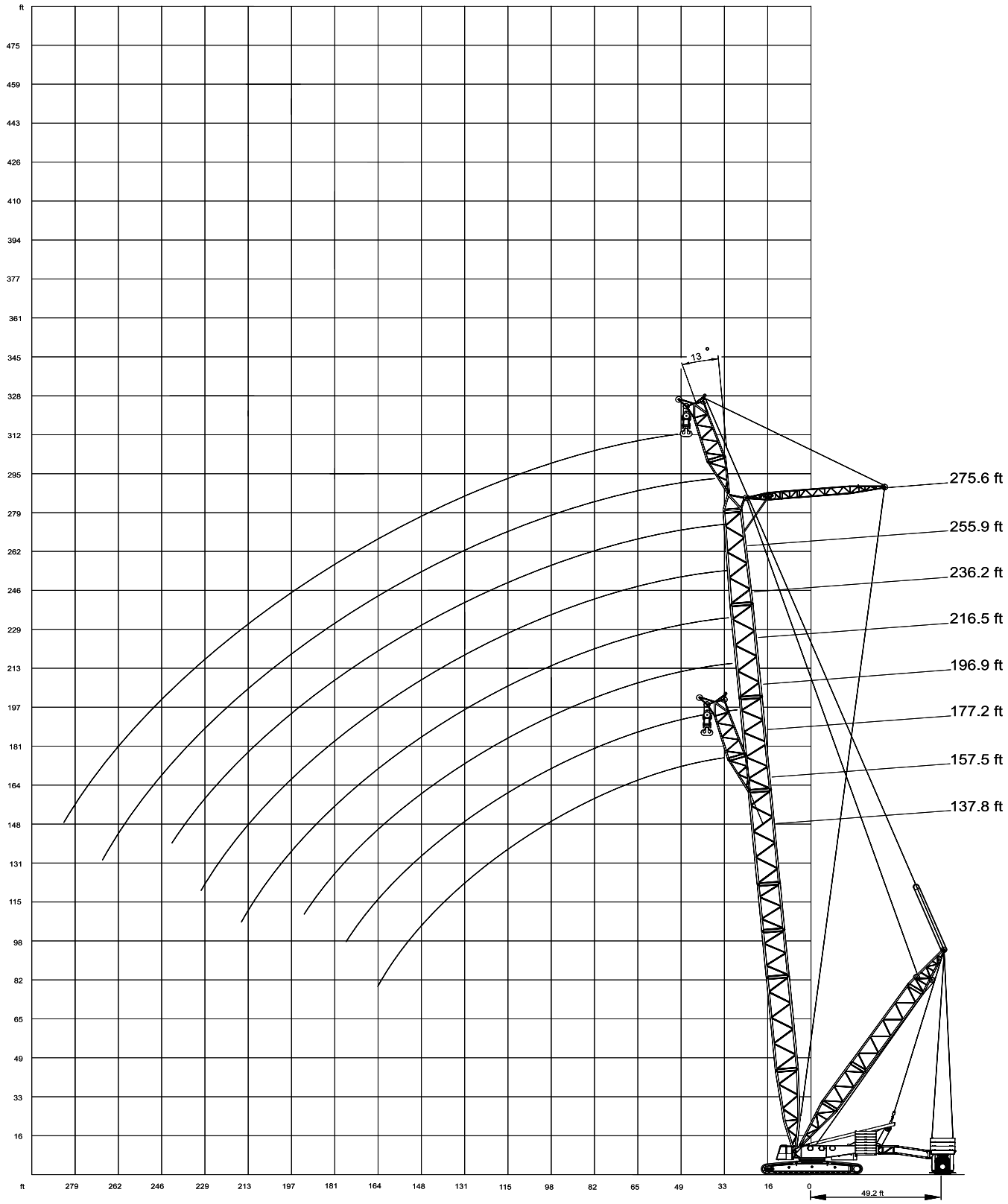

Lifting capacities fixed jib SFVL with Superlift

353,000 lb | **27.6 ft** | **SL-Radius 49.2 ft** | **360°** | **DIN/ISO**

		Main boom: 137.8 ft				Main boom: 177.2 ft				Main boom: 216.5 ft			
	Fly jib	39.4 ft				39.4 ft				39.4 ft			
		13°		20°		13°		20°		13°		20°	
Radius		0	716.5	0	716.5	0	716.5	0	716.5	0	716.5	0	716.5
	ft					1,000 lb							
	39	480.6	1058.2	–	–	–	–	–	–	–	–	–	–
	46	370.4	1009.7	374.8	965.6	366.0	853.2	372.6	813.5	361.6	654.8	–	–
	52	297.6	961.2	302.0	921.5	293.2	848.8	297.6	813.5	288.8	650.4	293.2	626.1
	59	246.9	868.6	249.1	868.6	240.3	844.4	244.7	806.9	235.9	646.0	240.3	621.7
	65	207.2	769.4	209.4	782.6	200.6	771.6	205.0	773.8	196.2	641.5	200.6	617.3
	72	176.4	698.9	178.6	701.1	172.0	690.0	174.2	692.3	165.3	621.7	169.8	610.7
	79	154.3	630.5	154.3	632.7	147.7	621.7	149.9	623.9	141.1	595.2	143.3	588.6
	85	134.5	573.2	136.7	575.4	127.9	566.6	130.1	568.8	121.3	557.8	123.5	560.0
	92	116.8	526.9	119.0	526.9	110.2	518.1	112.4	520.3	105.8	509.3	108.0	511.5
SFVL	98	103.6	485.0	105.8	487.2	97.0	476.2	99.2	478.4	90.4	467.4	92.6	469.6
	111	81.6	416.7	83.8	418.9	75.0	407.9	75.0	410.1	66.1	401.2	68.3	401.2
	124	63.9	352.7	66.1	359.4	57.3	354.9	57.3	357.1	48.5	348.3	50.7	348.3
	138	50.7	302.0	50.7	306.4	41.9	310.9	44.1	313.1	35.3	304.2	35.3	306.4
	151	39.7	253.5	39.7	255.7	30.9	275.6	33.1	275.6	22.0	269.0	24.3	269.0
	164	30.9	207.2	–	–	22.0	244.7	22.0	242.5	13.2	238.1	15.4	240.3
	177	–	–	–	–	15.4	211.6	15.4	213.8	–	213.8	–	213.8
	190	–	–	–	–	–	178.6	–	180.8	–	191.8	–	194.0
	203	–	–	–	–	–	–	–	–	–	169.8	–	172.0
	216	–	–	–	–	–	–	–	–	–	147.7	–	147.7
	230	–	–	–	–	–	–	–	–	–	125.7	–	–

		Main boom: 157.5 ft				Main boom: 196.9 ft				Main boom: 236.2 ft			
	Fly jib	39.4 ft				39.4 ft				39.4 ft			
		13°		20°		13°		20°		13°		20°	
Radius		0	716.5	0	716.5	0	716.5	0	716.5	0	716.5	0	716.5
	ft					1,000 lb							
	39	478.4	948.0	–	–	–	–	–	–	–	–	–	–
	46	368.2	943.6	372.6	908.3	363.8	771.6	–	–	–	–	–	–
	52	295.4	919.3	299.8	884.1	291.0	767.2	295.4	736.3	286.6	571.0	291.0	555.6
	59	242.5	877.4	246.9	859.8	238.1	762.8	242.5	725.3	233.7	568.8	238.1	551.2
	65	205.0	776.0	207.2	778.2	198.4	751.8	202.8	714.3	194.0	566.6	196.2	549.0
	72	174.2	694.5	176.4	696.7	167.6	685.6	172.0	683.4	163.1	560.0	165.3	544.5
	79	149.9	626.1	152.1	628.3	143.3	617.3	145.5	619.5	138.9	542.3	141.1	533.5
	85	130.1	568.8	132.3	571.0	123.5	560.0	125.7	564.4	119.0	526.9	121.3	518.1
	92	114.6	522.5	116.8	522.5	108.0	513.7	110.2	515.9	101.4	504.9	103.6	504.9
SFVL	98	101.4	480.6	101.4	482.8	92.6	471.8	94.8	474.0	86.0	463.0	88.2	465.2
	111	77.2	412.3	79.4	414.5	70.5	403.4	70.5	405.7	61.7	394.6	63.9	396.8
	124	59.5	359.4	61.7	359.4	50.7	350.5	52.9	352.7	44.1	341.7	46.3	343.9
	138	46.3	315.3	46.3	310.9	37.5	306.4	39.7	308.6	28.7	299.8	30.9	302.0
	151	35.3	273.4	35.3	266.8	26.5	271.2	26.5	271.2	17.6	264.6	19.8	264.6
	164	26.5	231.5	26.5	233.7	17.6	242.5	17.6	242.5	–	233.7	–	235.9
	177	19.8	194.0	–	–	–	213.8	11.0	218.3	–	209.4	–	209.4
	190	–	–	–	–	–	187.4	–	191.8	–	189.6	–	189.6
	203	–	–	–	–	–	163.1	–	163.1	–	169.8	–	172.0
	216	–	–	–	–	–	136.7	–	–	–	149.9	–	152.1
	230	–	–	–	–	–	–	–	–	–	130.1	–	132.3
	243	–	–	–	–	–	–	–	–	–	110.2	–	–

Lifting capacities fixed jib SFVL with Superlift

353,000 lb | **27.6 ft** | **SL-Radius 49.2 ft** | **360°** | **DIN/ISO**

		Main boom: 255.9 ft				Main boom: 275.6 ft			
	Fly jib	39.4 ft				39.4 ft			
		13°		20°		13°		20°	
	Radius	0	716.5	0	716.5	0	716.5	0	716.5
	ft					1,000 lb			
	52	284.4	482.8	–	–	282.2	427.7	–	–
	59	231.5	478.4	235.9	465.2	227.1	423.3	233.7	412.3
	65	191.8	474.0	194.0	460.8	187.4	418.9	191.8	407.9
	72	160.9	469.6	163.1	456.4	156.5	416.7	160.9	403.4
	79	134.5	465.2	138.9	451.9	132.3	410.1	136.7	401.2
	85	114.6	458.6	119.0	447.5	112.4	403.4	114.6	394.6
	92	97.0	451.9	101.4	440.9	94.8	394.6	97.0	388.0
	98	83.8	445.3	86.0	434.3	79.4	388.0	81.6	379.2
	111	59.5	392.4	61.7	394.6	55.1	363.8	57.3	361.6
	124	39.7	339.5	41.9	341.7	35.3	328.5	37.5	328.5
SFVL	138	26.5	295.4	28.7	297.6	22.0	291.0	24.3	293.2
	151	15.4	260.1	15.4	262.4	11.0	255.7	11.0	257.9
	164	–	231.5	–	231.5	–	227.1	–	229.3
	177	–	207.2	–	207.2	–	202.8	–	202.8
	190	–	185.2	–	185.2	–	180.8	–	183.0
	203	–	167.6	–	167.6	–	163.1	–	163.1
	216	–	149.9	–	152.1	–	147.7	–	147.7
	230	–	132.3	–	134.5	–	130.1	–	130.1
	243	–	114.6	–	116.8	–	114.6	–	114.6
	256	–	99.2	–	99.2	–	99.2	–	99.2
	269	–	83.8	–	–	–	86.0	–	86.0
	282	–	–	–	–	–	70.5	–	–

Remarks

Superlift mast 98.4 ft

Working ranges fixed jib SFVL with SL, 20°

SFVL

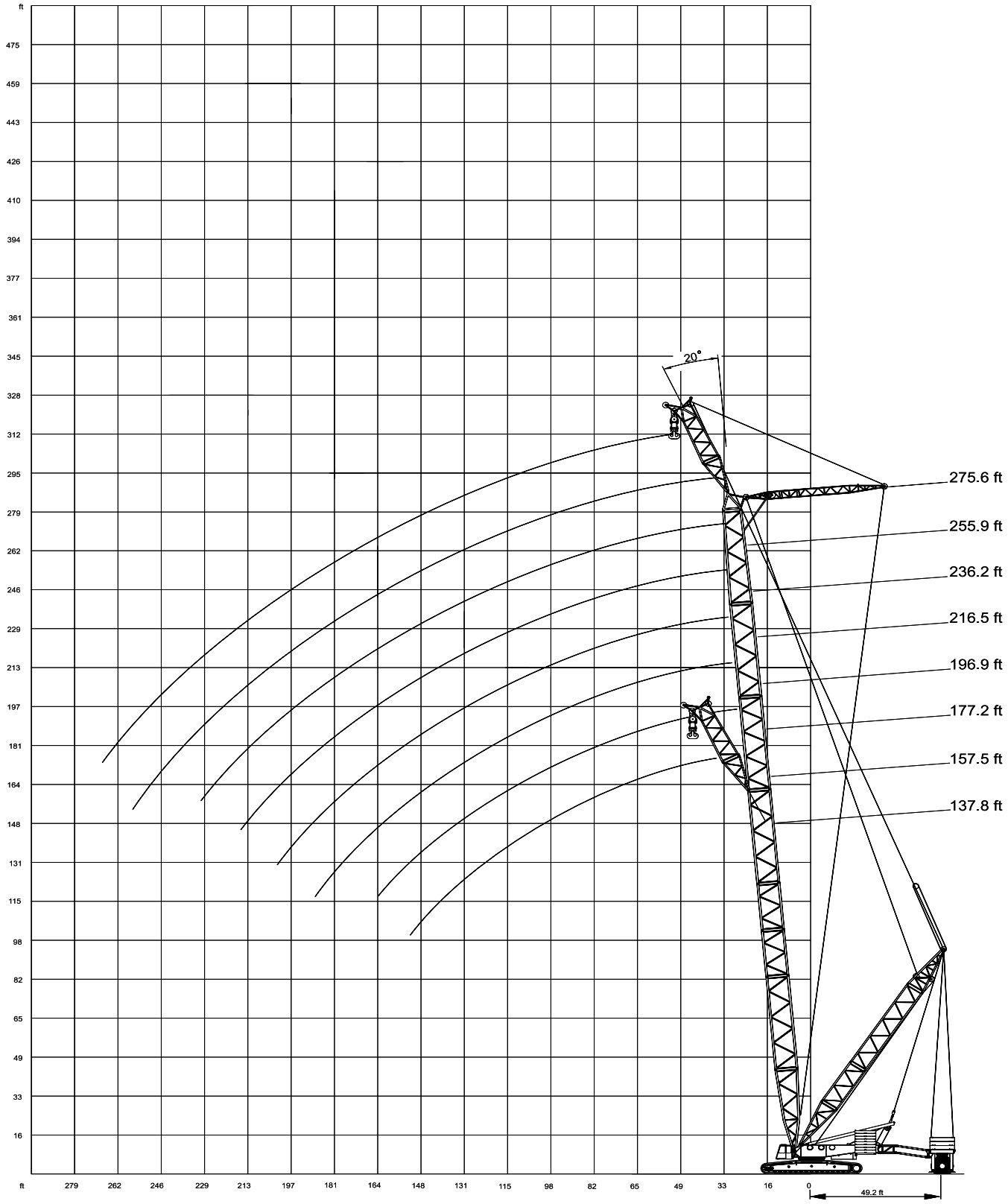

Notes to lifting capacity

Ratings are in compliance with ISO 4305 and DIN 15019.2 (test load = 1.25 x suspended load + 0.1 x dead weight of boom, reduced to boom point).
Weight of hook blocks and slings is part of the load, and is to be deducted from the capacity ratings.

Crane operation is permissible up to a
wind pressure of . . . . . 1.25 lb/ft^2

wind speed of . . . . . 32 ft/s

Consult operation manual for further details on wind speed.
Machine must be on firm and level ground to utilize max. tabulated ratings. Boom lengths and load must be reduced in case of out-of-level conditions or travel on uneven ground.

Note: Data published herein is intended as a guide only and shall not be construed to warrant applicability for lifting purposes. Crane operation is subject to the computer charts and operation manual both supplied with the crane.

Technical description

Crawler carrier

3-section carrier comprising of carbody and two crawlers. Hydraulic pin connections between crawlers and carbody provide for easy assembly and removal to minimise width and weight for transportation.

Carbody: Bending- and torsion-resistant welded structure of box type construction, fabricated of high-strength fine-grain structural steel.

Crawlers: Side frames: bending-resistant welded structure of high-strength fine-grain structural steel. Track shoes, idler and drive sprockets are fabricated of heat-treated high-strength cast steel. 15 rollers on each side frame with hardened rolling surfaces. Automatic centralized lubrication is included as standard.

Power train: The tracks are powered by two hydraulic motors each through closed planetary gear reduction units running in oil bath, equipped with spring-applied hydraulically released holding brakes; the gear units are of very compact design to fit within the width of the crawlers. Each crawler is infinitely variable controlled, both independently and in opposite direction.

Superstructure

Counterweight: 353,000 lb.

Frame: Torsion-resistant welded structure fabricated of high-strength fine-grain structural steel. Connected to carrier by triple-row roller bearing slew ring.

Drive: Daimler-Benz diesel engine type OM 502 LA, 390 kW (530 hp) at 2000 ^{1}/min, torque 2400 Nm at 1080 ^{1}/min. The engine complies with EUROMOT, EPA and EURO II regulations as an option. Pump distribution gearbox with five variable displacement axial piston pumps, and gear pumps.

Rope drums: The standard superstructure equipment includes three rope drums – hoist 1, hoist 2 and boom hoist. The drums are powered by hydraulic motors through closed planetary gear units running in oil bath. All rope drums have spring-applied, hydraulically released multi-disk brakes and non-wearing hydraulic braking for load lowering. Rope ends H 1, 2, 3 and W 1, 2 equipped with quick-connect rope end fittings. Hoists H 1 + 2 are removable to minimise weight for transportation.

Slew unit: Powered by hydraulic motor through closed, planetary gear unit running in oil bath. Spring-applied, hydraulically released holding brake and non-wearing hydraulic braking.

Control: Electronic proportional valve pilot-control integrated into stored-program control system with fault diagnosis. Automatic power control giving optimal utilisation of engine output.

Cabin: Comfortable cab with large windscreen. Safety-glazing all around, roof window, self-contained hot air heater, full instrumentation and crane controls. The cab can be tilted back for improved operator view of boom point. A camera system is installed to monitor the rope drums. For transportation, the cab swings in front of the superstructure to minimise width.

Electrical equipment: 24 V d. c. system.

Optional equipment

Counterweight: 44,000 lb on the superstructure (only in conjunction with central ballast).

Central ballast: 132,000 lb.

Hydraulic raising system for A-frame

Assembly jacks: Four hydraulic jacking cylinders on carbody (folding within 9.8 ft width) for easy assembly of crawlers.

Counterweight carrier: Drive 4 x 4, total weight max. 717,000 lb.

Quick-connection: Hydraulic quick-disconnect fittings on carrier and superstructure facilitate removal to minimise weight for transportation.

Airconditioner

Track shoes: 6.6 ft.